CHAPTER 1

Overview of Cisco Media Gateway Controller Node Manager

Revised: December 16, 2009, OL-14480-06

This chapter includes the following sections:

- An introduction to Cisco Media Gateway Controller (MGC) Node Manager (MNM), including terms and architecture of the Cisco PGW 2200 Softswitch.
- Key feature descriptions of Cisco MNM.
- An overview of Cisco Element Manager Framework (Cisco EMF), the framework for Cisco MNM.
- An explanation of how Cisco MNM models the network, which describes the various ways you can view and manage your network using Cisco MNM.

Introduction

Cisco Media Gateway Controller Node Manager provides fault, configuration, provisioning, and performance management for two kinds of Cisco PGW 2200 Softswitch-based networks:

- A Cisco PGW 2200 Softswitch node (shown in Figure 1-1), which consists of these components:
  - A Cisco PGW 2200 Softswitch host.
  - One or more Cisco IP Transfer Point LinkExtenders (Cisco ITP-Ls) integrated in the AS5350 or AS5400 access servers. The Cisco ITP-L serves as the signaling gateway to the SS7 network.
  - A Cisco 2811 ITP-L service router. The Cisco 2811 ITP-L service router functions as the signaling gateway to the SS7 network.
  - The Cisco Catalyst 5500, Catalyst 6509, or Catalyst 2900 XL LAN switch, which provides IP connectivity for all node elements.
  - Optionally, a Cisco Billing and Measurements Server (BAMS) and a Cisco H.323 Signaling Interface (HSI) server associated with the Cisco PGW 2200 Softswitch (see Figure 1-1).
- A Cisco PGW 2200 Softswitch farm, a cluster of Cisco PGW 2200 Softswitch nodes operating in concert with a cluster of two or more Internet Transfer Points (ITPs). In this configuration, one or more ITPs, rather than an ITP-L, serve as the signaling gateway to the SS7 network. The farm of Cisco PGW 2200 Softswitch hosts appears as a single point code to the public switched telephone network (PSTN).

See the Cisco MNM release notes for the software releases supported on these components:

http://www.cisco.com/en/US/products/sw/netmgtsw/ps1912/prod_release_notes_list.html

Note

- From Cisco MNM Release 2.7(3) onward, Cisco VSPT is packaged with Cisco MNM and is no longer available as a free customer download.
- Cisco IP Transfer Point LinkExtender (ITP-L) is the new name for Cisco Signaling Link Terminal (SLT). Over time, Cisco ITP-L will replace Cisco SLT in publications and the product.

Figure 1-1 Cisco MNM with Cisco PGW 2200 Softswitch Node

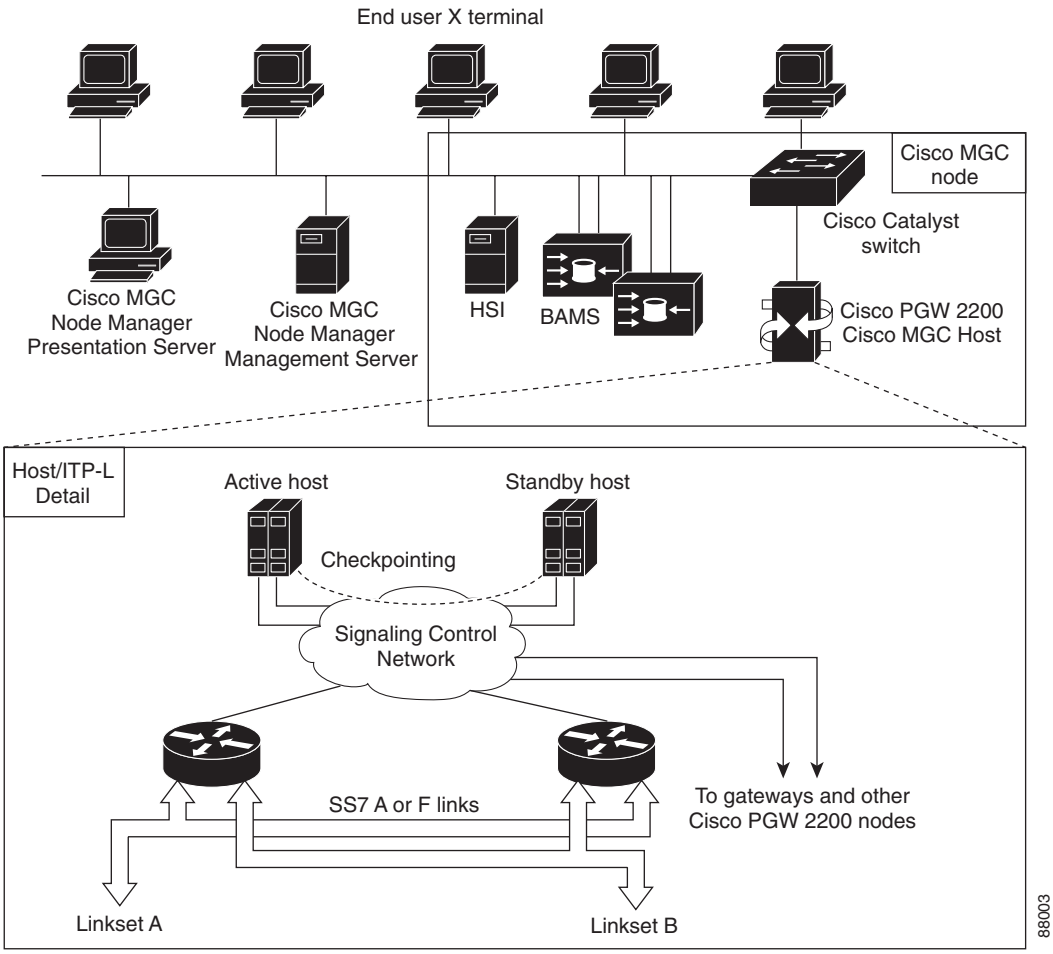

Terms Used in This Document

The following terms are used in this document:

- Cisco BAMS—A UNIX-based software application that accepts individual call detail blocks generated by Cisco PGW 2200 Softswitches. BAMS validates and correlates the records into a merged usage record, facilitates traffic-oriented statistical analysis, and generates Bellcore Automatic Message Accounting (AMA) Format (BAF) records on a per-call basis.

- Cisco EMF—The element management framework upon which Cisco MNM is built.
- Cisco PGW 2200 Softswitch—The key to Cisco's voice domain solutions. The Cisco PGW 2200 Softswitch node comprises a number of different components, including the Cisco PGW 2200 Softswitch host and a Cisco ITP-L or an integrated ITP-L.
- Cisco PGW 2200 Softswitch host—A Sun host server running Cisco PGW 2200 Softswitch software.
- Cisco PGW 2200 Softswitch node—The logical grouping of the active and standby Cisco PGW 2200 Softswitch hosts, control signaling network, Cisco ITP-Ls, LAN switches, HSI servers, and the BAMS.
- Cisco PGW 2200 Softswitch farm—A cluster of Cisco PGW 2200 Softswitch nodes, each containing one or a failover pair of Cisco PGW 2200 Softswitch hosts, using two or more Cisco ITPs as the signaling gateway to the SS7 network.
- CiscoView—A graphical device management tool for chassis views and a diagnostic tool for non-Sun components. CiscoView ships as part of the LAN Management Solution (LMS) package that comes with Cisco MNM. Only the CiscoView part of LMS is provided.
- Cisco Voice Services Provisioning Tool (VSPT)—Graphical user interface for provisioning most Cisco PGW 2200 Softswitch MML parameters. Some parameters are not configurable in Cisco VSPT/MML because they need to be set only once during installation through editing of the file XECfgParm.dat.

Note For more information on XECfgParm.dat, see the section, "Configuring the Execution Environment," of the *Cisco Media Gateway Controller Software Installation and Configuration (Release 9.7)* at the following link:
http://www.cisco.com/en/US/docs/voice_ip_comm/pgw/9/installation/software/SW1/97.html

- Cisco HSI—An optional server that enables the Cisco PGW 2200 Softswitch to interoperate with an H.323 network.

Overview of the Cisco PGW 2200 Softswitch Node Architecture

The Cisco PGW 2200 Softswitch node comprises a combination of the following components:

- Cisco PGW 2200 Softswitch host—A Sun server running the Cisco PGW 2200 Softswitch software, which is responsible for most of the Cisco PGW 2200 Softswitch functionality, including (depending on the configuration) number analysis, routing, and switching.
- Cisco ITP-L—A Cisco router that terminates Signaling System 7 (SS7) signaling lines from the PSTN and provides an interface to the Cisco PGW 2200 Softswitch host.

  The Cisco 2811 ITP-L consists of a customized Cisco IOS Release 12.4(11)SW2 software image running on a Cisco 2811 router.

  The integrated Cisco ITP-L runs on a Cisco AS5350 or AS5400 access server.
- Cisco LAN switch—An Ethernet switch connecting the Cisco ITP-L to the Cisco PGW 2200 Softswitch host, Cisco BAMS, Cisco HSI server, Cisco MNM, and the Cisco Voice Services Provisioning Tool.

  A Cisco Catalyst 2900XL, 5500, or 6509 LAN switch can be managed by Cisco MNM.
- Cisco BAMS—Provides measurement and billing mediation from Cisco PGW 2200 Softswitch Call Detail Records (CDRs).

- Cisco HSI Server—A Cisco HSI system that adds an H.323 interface to the Cisco PGW 2200 Softswitch. This interface allows calls to be established between the PSTN and an H.323 network.

A Cisco PGW 2200 Softswitch node is (optionally) fully redundant. This means that each Cisco PGW 2200 Softswitch might have multiples of each type of component. At any given time, one Cisco PGW 2200 Softswitch host is considered active and the other standby. If the active Cisco PGW 2200 Softswitch host fails, the standby host becomes active. There is no concept of active or standby with LAN switches, Cisco ITPs, Cisco ITP-Ls, or the Cisco BAMSs. If two are present, both are active at all times providing redundancy.

Note The version of Cisco MNM you use depends on your Cisco PGW 2200 Softswitch version. Cisco MNM Release 2.7(3) supports Cisco PGW 2200 Softswitch Releases 9.5(2) through 9.7(3). However, Cisco VSPT is version specific.

Key Features of Cisco MNM

The most common Cisco EMF installation includes plug-in modules referred to as element managers or Element Management Systems (EMSs). In the Cisco PGW 2200 Softswitch node architecture, Cisco MNM is a Cisco EMF-based EMS responsible for managing the Cisco PGW 2200 Softswitch node. Cisco MNM adds specific graphical user interface (GUI) windows and modeling behavior to the standard Cisco EMF system to allow the management of network elements.

Cisco MNM uses Cisco EMF to manage the following components:

- Cisco PGW 2200 Softswitch
- Cisco ITP-L
- Cisco LAN Switch (Cisco Catalyst 2900, 5500, and 6509 only)
- Cisco BAMS
- Cisco HSI

The key features of Cisco MNM are

- Fault management—Cisco MNM provides fault management of the Cisco PGW 2200 Softswitch node (the Cisco PGW 2200 Softswitch host, the Cisco ITP-L, the Cisco LAN switch, the Cisco HSI server, and the Cisco BAMS). You can see the alarms generated by these elements in the Cisco MNM system.

  When the Cisco PGW 2200 Softswitch host detects a problem with one of its connections, it generates a trap. Cisco MNM receives these traps and sends them to the graphical object that represents that connection. For example, if Cisco MNM receives a trap that the link to a media gateway is down, Cisco MNM sends that trap to the object that represents the media gateway link. You can then acknowledge and clear the alarms and forward traps.

  In order to make the identification of potential problems easy, Cisco EMF propagates the alarm state of network elements upwards through the node and physical views. If an object receives an alarm, it changes color to reflect its new state, and all parent objects also change color to reflect the most severe alarm on any of the children.

  Cisco MNM periodically polls each managed object to ensure that the device is still reachable through SNMP. If the device is not reachable, an annotation appears on the display in the Map Viewer, an alarm is generated, and the object is placed in an error state. After the object loses

connectivity, Cisco MNM continues to poll the object until it can be reached. Once connectivity is re-established, the alarm is cleared, the annotation on the Map Viewer is removed, and the object is returned to the normal state.

For more information on fault management, see Chapter 6, "Managing Faults with Cisco MNM."

- Performance monitoring—Cisco MNM collects and displays performance information from the Cisco PGW 2200 Softswitch node, helping you to monitor the health and performance of the network. Cisco MNM collects performance information from all the components of the Cisco PGW 2200 Softswitch node.

  You can

  - Graph and display the performance information
  - View performance data associated with an object and graph that data over time
  - Configure the objects to poll and the frequency of the polling
  - Export the performance data in .csv, tab, and comma-delimited formats for use by other applications

  For more information on performance monitoring, see Chapter 7, "Managing the Performance of Cisco MNM Devices."

- User administration—Cisco MNM supports role-based access to its management functions. The administrator defines user groups and assigns users to these groups. Cisco MNM supports control of administrative state variables for Cisco PGW 2200 Softswitch node resources. For more information on access control, see Chapter 4, "Setting Up Cisco MNM Security."
- Billing and measurements
  - Cisco MNM collects trunk group and bearer channel measurements from the Cisco BAMS, and the Cisco BAMS creates measurement files from the CDRs on the Cisco PGW 2200 Softswitch Host.
  - Third-party billing packages are supported directly by the Cisco BAMS.
- Configuration
  - Cisco Voice Services Provisioning Tool (VSPT)—A Cisco PGW 2200 Softswitch and Cisco BAMS configuration GUI tool is included with Cisco MNM 2.7(3). Cisco VSPT also provides tools for Cisco PGW 2200 Softswitch backup, restore, and configuration checking.
  - CiscoView—Used to configure and monitor the Cisco ITP-L and LAN switches. CiscoView is delivered on an LMS CD in the Cisco MNM media kit. Only the CiscoView part of LMS is provided.
- Troubleshooting—Cisco MNM provides a full range of diagnostic and troubleshooting tools, such as IP and SNMP Ping, Alarm and System Log, Host Status Check, Cross-Device Audit, and the MGC toolbar that includes CDR Viewer, Log Viewer, Trace Viewer, and Translation Verification Viewer.
- Secure communications—If you install the Cisco EMF SSH add-on, you can use SSH-based secure communications with SSH-enabled components:
  - Cisco PGW 2200
  - Cisco BAMS
  - Cisco HSI server
  - Cisco ITP-L
  - Cisco Integrated ITP-L

– Cisco Catalyst switches (2900XL, 5500 and 6509)

The components must have SSH installed, and you must define their security policy (at deployment or in the Accounts dialog box) as "ssh." With SSH support installed, all operations that previously used Telnet or File Transfer Protocol (FTP) instead use ssh (the secure shell counterpart of Telnet) or sftp (the secure shell counterpart of FTP) when communicating with SSH-enabled components.

Overview of Cisco EMF

Cisco MNM is based on Cisco EMF, a carrier-class network management framework. This framework was designed to address the challenges of developing and deploying robust, large-scale, multivendor, multitechnology management solutions.

Cisco EMF is used to quickly develop and deploy element-, network-, and service-level applications in technologies ranging from Digital Subscriber Line (DSL)—used for high-speed Internet access cable modems and Voice over IP—to complex ATM/IP routing multiservice switches.

Cisco EMF Components

Cisco EMF consists of

- A series of applications that form a front-end GUI to process input (the Cisco EMF Client software)
- A series of back-end server processes that maintain a model of the network and carry out the actual interfacing to the network elements (the Cisco EMF Server software) (see Figure 1-2)

Network Operations Center (NOC) users typically interact with the Cisco EMF Client software by connecting from an X terminal workstation. Cisco MNM supports up to 10 active, concurrent sessions.

Figure 1-2 Cisco EMF Processes

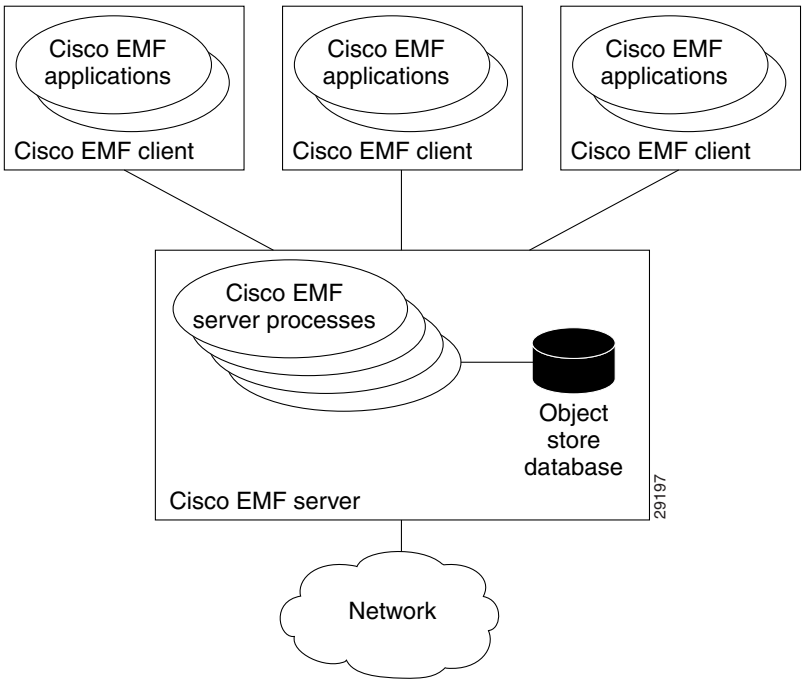

Cisco EMF comes with the following set of applications accessed from the launchpad (see Figure 1-3), each of which opens when you start a Cisco MNM session:

- Map Viewer—View, build, and monitor a network with the Map Viewer. You can monitor the network using network and network object connections.
- Object Group Manager—Organize network elements into object groups. You can create, delete, and modify object groups.
- Access Manager—Set up users and user groups, assign passwords, and define access parameters.
- Event Browser—Display the Event Browser and Query Editor. You can create object groups or browse events from these screens.
- Discovery—Because Cisco MNM requires a login and password in order to fully discover and deploy a device, the Cisco EMF Automatic Discovery feature is not used by Cisco MNM. Cisco MNM performs discovery of device components and configurations once the device has been identified (IP address, host name, and login information entered into Cisco MNM), as described in Chapter 5, "Deploying Your Network in Cisco MNM."
- Cisco MNM Manuals—Open a browser window and displays links to the Cisco Media Gateway Controllor Node Manager end user guides at

  http://www.cisco.com/en/US/products/sw/netmgtsw/ps1912/products_user_guide_list.html.
- Event Manager
  - Notify—Create notification profiles that consist of a series of notifications to be carried out as a result of the profile being triggered.
  - Thresholds—Configure the management system to actively monitor the network and notify the operator when some aspect of the network performance has deviated from preset criteria.
  - Event Groups—Filter and organize events based on specified criteria, such as severity, state, or type of network element, and then create a scoreboard to show the state of the group at a glance.
  - PreFilter—Prefilter some messages collected in Cisco MNM according to the defined rules.

Figure 1-3 Cisco EMF Launchpad

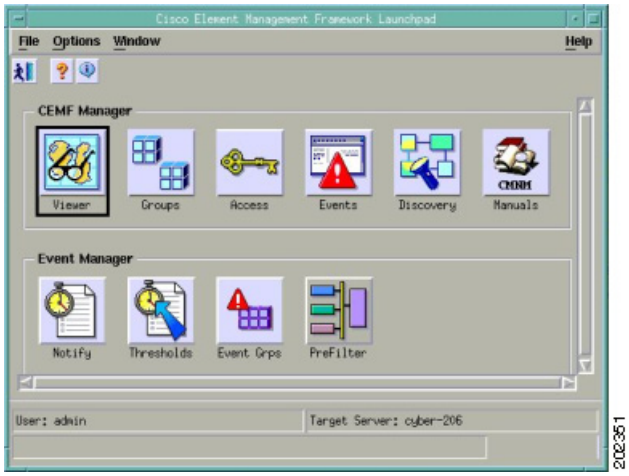

How Cisco EMF Builds a Model for the Network

Cisco EMF keeps a model of the managed network in its database and uses the model to keep track of the current state of the network.

The Cisco EMF model of the network uses the following components:

- Objects—Each element managed by Cisco EMF is regarded as an object.

  An object can represent:

  - A router or a switch
  - A site, region, or node
  - Services provided by the network, for example, a permanent virtual connection (PVC)
  - A subscriber or a customer

- Object classes—Each object within Cisco EMF has an associated object class. Each class of object indicates a different kind of element. Examples of classes are routers, line cards, or sites. Each class of object has different data stored against it and displays different behavior.

  In the Map Viewer application, the class of the object is indicated with an icon used within the Map Viewer browser.

  You can perform powerful queries on different classes of objects. For example, you can show all events in the system for Cisco ITP-Ls or create a group of Cisco LAN Switch objects.

- Object attributes—Each object has a number of attributes that can be accessed. An attribute is a piece of information either stored against the object or accessible from the object through some network protocol. Examples of attributes are IP address, interface table number, and upstream power.

  These attributes are associated with the object according to the granularity of object types. A type is a collection of related attributes, and each class usually has a number of types. An object's class defines which types and, therefore, which attributes it is allowed to have and which types it has by default.

  Figure 1-4 gives an example of the association between classes and types.

Figure 1-4 Example of Object Types and Attributes

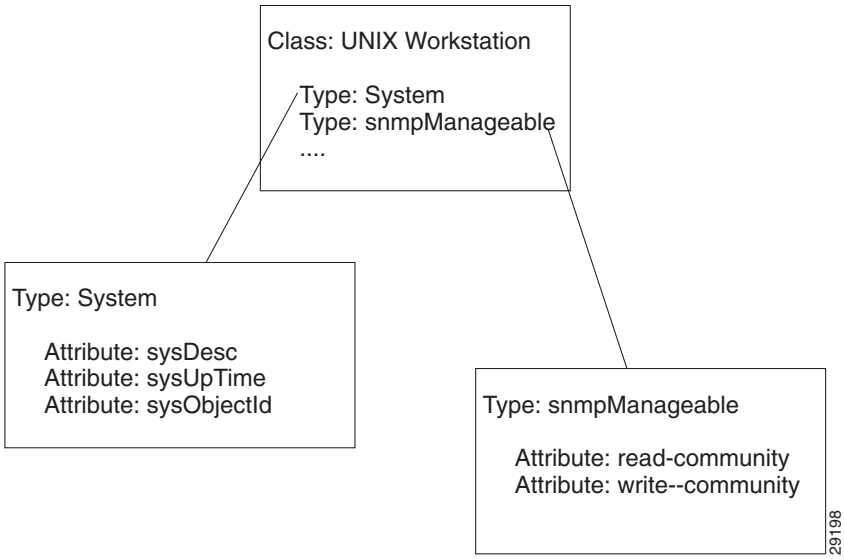

In Figure 1-4, a UNIX Workstation class is specified. This class of object includes two types: System and snmpManageable. The System type includes the sysDesc, sysUpTime, and sysObjectId attributes. The snmpManageable type includes the read-community and write-community attributes.

- Views—A view is a collection of objects in a hierarchical relationship. Each object can have a number of parents and children. See "How Cisco MNM Builds a Model for the Network" for more information on Cisco MNM views.
- Object groups—An object group is a collection of objects that are related in some way. They may all be the same type of equipment or all belong to the same customer.

  Object groups can be built manually or by building a query and are accessible through the Object Group Manager application.

How Cisco MNM Builds a Model for the Network

Cisco MNM applies the Cisco EMF network object model to the Cisco PGW 2200 Softswitch node. The hub of Cisco MNM network management is the Map Viewer. From the Map Viewer you can access network objects by navigating through one of the views to find the object. Each view represents a different way of containing and grouping the objects, such as by device type, by Cisco PGW 2200 Softswitch node, or by physical or network view. Cisco MNM views are summarized in Table 1-1 and described in detail on the following pages.

Note This section provides conceptual information about the network model that is displayed in the Map Viewer. For information on using the Map Viewer, see the "Using the Map Viewer" section on page 3-10.

Table 1-1 Cisco MNM Views in the Map Viewer

View	Description
MGC-Node-View	Displays all of the Cisco PGW 2200 Softswitch nodes in the network along with their logical children (Cisco ITP-Ls and Cisco PGW 2200 Softswitch hosts), and all the Cisco PGW 2200 Softswitch farms along with their logical children (Cisco PGW 2200 Softswitch nodes containing hosts only) and propagates child alarms to the parents. This view also includes all of the signaling, dial plan, and trunking components of the Cisco PGW 2200 Softswitch node. For more information, see the "MGC Node View" section on page 1-10. If you are using BAMS Phase 3, this view displays each BAMS node associated with the Cisco PGW 2200 Softswitch.
Host-View	Presents all of the Cisco PGW 2200 Softswitch host devices in the network. For more information, see the "Host View" section on page 1-21.
ITP-L-View	Presents all of the Cisco ITP-L devices in the network, including integrated ITP-Ls and integrated ITP-L coresident EMs. This view also contains all of the interfaces on each Cisco ITP-L. For more information, see the "ITP-L View" section on page 1-22.
Switch-View	Presents all of the LAN switch devices in the network. This view also shows all of the interfaces on each LAN switch. For more information, see the "Switch View" section on page 1-23.
BAMS-View	Presents all of the Cisco BAMS in the network. For more information, see the "BAMS View" section on page 1-23.
HSI-View	Presents all Cisco HSI devices in the network. See the "HSI View" section on page 1-24.
Physical	Displays all of the Cisco PGW 2200 Softswitch network devices grouped by physical location (buildings, sites, or regions), and propagates child alarms to the parents. For more information, see the "Physical View" section on page 1-24.
Network	Displays all IP devices within their relative networks and subnets. This is a standard Cisco EMF view. For more information, see the "Network View" section on page 1-25.

MGC Node View

The MGC node view displays all of the Cisco PGW 2200 Softswitch node elements in the network. For each Cisco PGW 2200 Softswitch node, all of the logical components of the node are displayed, as illustrated in Figure 1-5.

Figure 1-5 MGC Node View

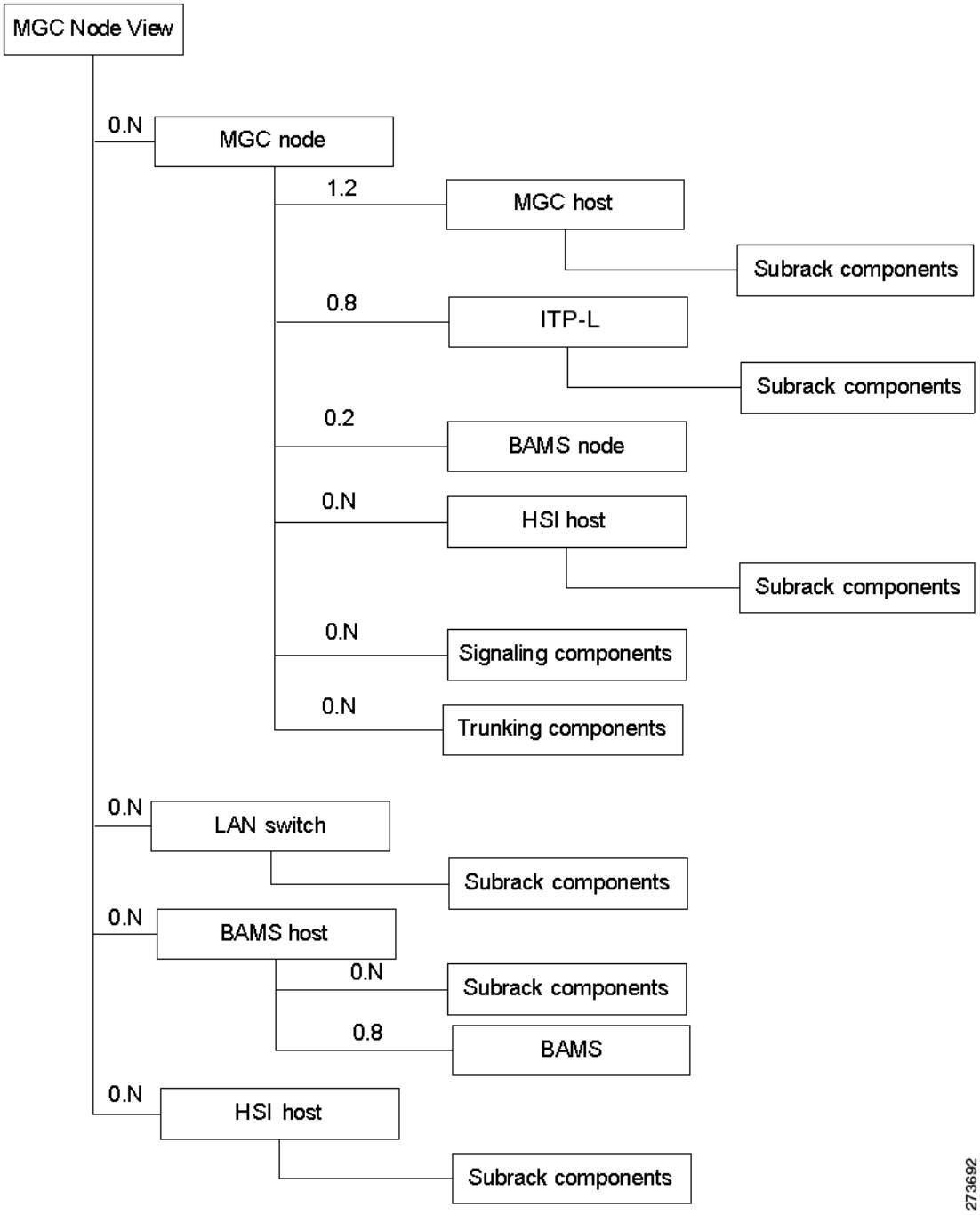

Note

- HSI Host view under MGC Node View is added in Release 2.7(3) Patch 2. In previous versions, HSI Host view is not available under MGC Node View.
- Dial Plan Components on Cisco PGW 2200 Softswitch are no longer supported since Cisco MNM Release 2.7(3) Patch 4.

The MGC node view also displays all of the Cisco PGW 2200 Softswitch farms in the network. For each MGC farm, all of the logical components of the farm are displayed, as illustrated in Figure 1-6.

Figure 1-6 MGC Farm View

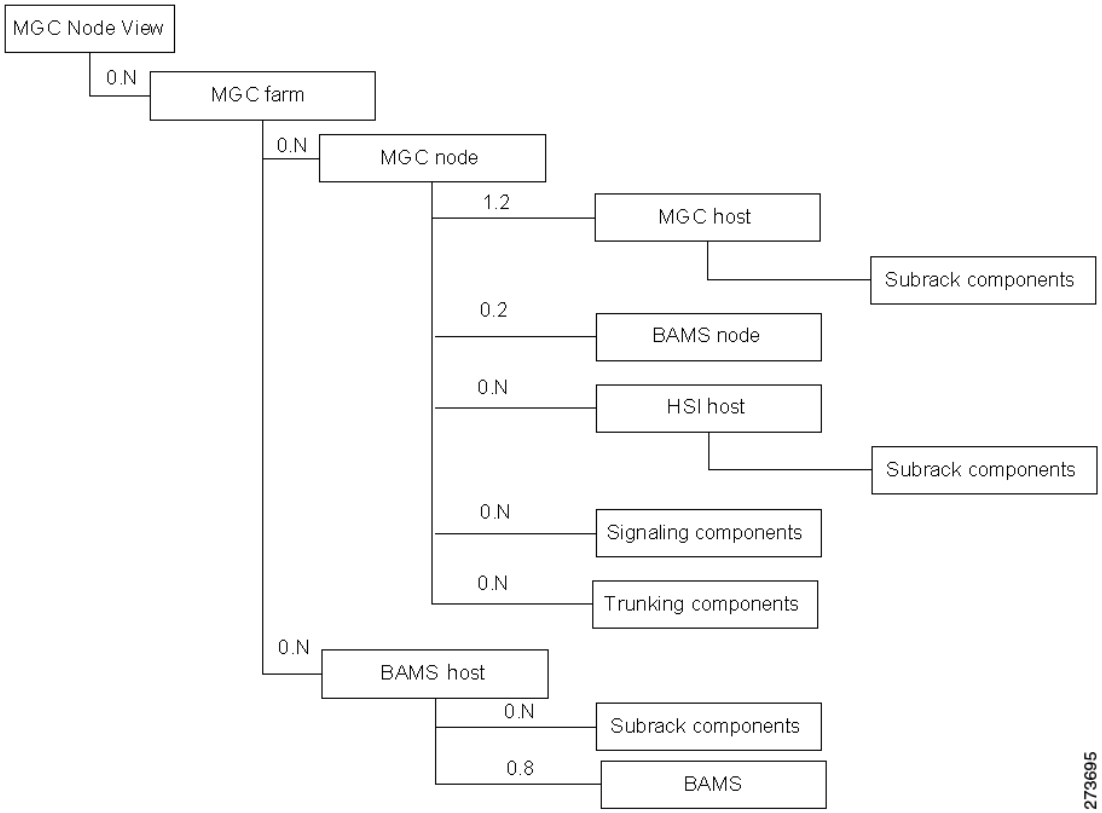

Note Dial Plan Components on Cisco PGW 2200 Softswitch are no longer supported on Cisco MNM Release 2.7(3) Patch 4.

Each Cisco PGW 2200 Softswitch node is represented with its child elements.

- In the case of a *nonfarm node*, these child elements include the Cisco PGW 2200 Softswitch hosts, Cisco BAMS, Cisco HSI server, Cisco ITP-Ls (including integrated ITP-Ls and integrated ITP-L coresident EMs), and each device's network interfaces. Depending on the configuration, there can be a maximum of two Cisco PGW 2200 Softswitch host devices (active/standby pair), two Cisco BAMS (active/standby pair), two or more Cisco HSI servers, eight Cisco ITP-Ls, and two LAN switches.

- In the case of a node in a farm, the child elements include the Cisco PGW 2200 Softswitch hosts, Cisco BAMS, and Cisco HSI server. Depending on the configuration, there can be a maximum of two Cisco PGW 2200 Softswitch host devices (active/standby pair), two Cisco BAMS (active/standby pair), two or more Cisco HSI servers, and one or more ITPs.

Note The Cisco BAMS must be configured to collect CDRs for a Cisco PGW 2200 Softswitch host in the same node to actively poll the host.

In addition to the physical devices, the logical configuration of the active Cisco PGW 2200 Softswitch host is also displayed in the MGC node view. This logical configuration includes the signaling, trunking, and dial plan information from the active Cisco PGW 2200 Softswitch host.

Cisco PGW 2200 Softswitch Host Signaling, Trunking, and Dial Plan Components

This section provides information about how Cisco MNM builds models for the following components in the node view:

- Cisco PGW 2200 Softswitch host signaling network
- Cisco PGW 2200 Softswitch host trunking components
- Cisco PGW 2200 Softswitch host dial plan components

Note Dial Plan Components on Cisco PGW 2200 Softswitch are no longer supported since Cisco MNM Release 2.7(3) Patch 4.

Cisco PGW 2200 Softswitch Host Signaling Network

Cisco MNM displays the status of the Cisco PGW 2200 Softswitch host signaling network on the Map Viewer interface. This includes showing the status of the logical connections from the active Cisco PGW 2200 Softswitch host to these elements:

- Interfaces (Ethernet)
- Signal transfer points (STPs)
- Destination point code (SS7 routes)
- Connected Cisco PGW 2200 Softswitches
- TCAP nodes
- Media gateways
- Cisco ITP-L
- LAN switches

When the common Cisco PGW 2200 Softswitch host object is first deployed, the object database is populated with objects that represent the logical connections from the active Cisco PGW 2200 Softswitch host to the external devices. Cisco MNM then monitors the status of these connections and informs you of any loss of connectivity.

As new connections are deployed, the signaling network is updated to reflect the current configuration and network status of the active Cisco PGW 2200 Softswitch host.

Cisco MNM monitors the status of the signaling network by processing and decoding alarms, known as *traps,* from the active Cisco PGW 2200 Softswitch host. Upon receipt of a trap, Cisco MNM maps the trap to the node representing the logical connection, and an alarm associated with the node is displayed.

Cisco MNM communicates with the Cisco PGW 2200 Softswitch host using

- SNMP—SNMP is used for receiving real time statistics, partial MIB based discovery, and alarm traps.
- FTP—FTP or SFTP (Secure FTP) is used for bulk transfers of historical performance statistics and uploading MML discovery files.
- Man-Machine Language (MML)—MML is the TL1 based command line interface on the Cisco PGW 2200 Softswitch Host, the Cisco BAMS, and the Cisco HSI server. It is used for EMS information, configuration, and control functions when the SNMP MIBs do not cover the needed functionality.

Cisco PGW 2200 Softswitch Host Signaling Objects

The Cisco PGW 2200 Softswitch host software defines over 20 different types of network signaling component types. Cisco MNM queries the configuration of the active Cisco PGW 2200 Softswitch host and represents the objects in the display.

The hierarchical structure or relationship of the components is based on the configuration defined by the active Cisco PGW 2200 Softswitch host. This configuration can vary from installation to installation. Cisco MNM, however, is able to handle any type of configuration present on the host.

Cisco MNM defines a class to represent each network signaling component type. For example, there is a class for an IP link, a point code, and an external node. The attributes associated with each class exactly match the attributes of the MML command used to provision the object.

Table 1-2 describes the classes used to represent the signaling network in Cisco MNM.

Table 1-2 Classes Representing Signaling Network

Class	Name	Description
apc	Adjacent point code	Defines an SS7 STP or external switch through which the Cisco PGW 2200 Softswitch connects to external switches and other Service Switching Points (SSPs).
association	Association	Represents an SCTP association
bripath	Basic Rate Interface signalling services	Basic Rate Interface signaling services.
c7iplnk	C7 IP link	Identifies a link between a Cisco ITP-L IP address and port, and the SS7 network.
card	Card	Network card or adapter that is operating in the Cisco PGW 2200 Softswitch
caspath	CAS Path	Sigpath associate bearer channels to one signaling sigpath.
dchan	D Channel	D channel backup.
dpc	Destination point code	SS7 destination point code.
dpnsspath	DPNSS Path	DPNSS signaling path that is back-hauled over IP to or from a Network Access Server (destination).

Table 1-2 Classes Representing Signaling Network (continued)

Class	Name	Description
eisuppath	EISUP path	Signaling service or signaling path to an externally located Cisco PGW 2200 Softswitch.
enetif	Ethernet interface	Physical line interface between a Cisco PGW 2200 Softswitch Ethernet network card/adapter and the physical Ethernet network.
extnode	External node	MGW with which the Cisco PGW 2200 Softswitch communicates.
faspath	FAS path	Service or signaling path to a particular destination using either ISDN-PRI or DPNSS.
files	Files	Customer-specific flat files that can be used to provision trunks and dial plans.
h248path	H.248 signaling service	Signaling service or signaling path to a trunking gateway.
ipfaspath	IP FAS path	Transport service or signaling path from a gateway to a Cisco PGW 2200 Softswitch
ipinmapping	IP In Trunk Mapping	IP addresses and ports allowed in incoming messages on the SIP or EISUP incoming trunk
iplnk	IP link	IP connection between a Cisco PGW 2200 Softswitch Ethernet interface and a Cisco MGW.
iproute	IP Route	Static IP route.
lnkset	Linkset	Group of all communication links that connect the Cisco PGW 2200 Softswitch to an adjacent STP.
m3uakey	M3ua Key	M3UA Routing key. The parent of the M3UAKEY is the OPC.
m3uaroute	M3ua Route	M3UA route, used to determine how to get an SS7 message to a particular destination using M3UA. M3UA route is similar to SS7ROUTE.
mgcppath	MGCP path	Signaling service or signaling path to a trunking gateway.
mltipfas	Multiple IPFAS services and IP links	Multiple IPFAS/IPNFAS signaling paths and D channels.
naspath	NAS path	Q.931 protocol path between the Cisco PGW 2200 Softswitch and the Cisco MGW.
opc	Origination point code	Origination (own) point code.
ptcode	Point Code	An SS7 network address that identifies an SS7 network node.
sessionset	Session set	A pair of backhaul links used to communicate with external nodes that support IPFAS.
sgp	SGP	SS7 Signaling Gateway Process.
siplnk	SIP IP link	A SIP IP link used to communicate with the SIP proxy servers.
sippath	SIP Path	The SIP signaling service or signaling path to proxy server.

Table 1-2 Classes Representing Signaling Network (continued)

Class	Name	Description
ss7path	SS7 path	Specifies the protocol variant and the path that the Cisco PGW 2200 Softswitch uses to communicate with a remote switch (SSP) sending bearer traffic to the Cisco MGWs.
ss7route	SS7 route	Path from the Cisco PGW 2200 Softswitch through a linkset to another Cisco PGW 2200 Softswitch.
ss7subsys	SS7 subsystem	Logical entity that mates two Signal Transfer Points (STPs).
suakey	Sua Key	SUA Routing key. The parent of the SUAKEY is the OPC.
suaroute	Sua Route	SUA route. It is used to determine how to get an SS7 message to a particular destination using SUA.
tcapippath	TCAP IP path	Signaling service path to an STP or SCP.
tcplink	Backhaul TCP Link	Backhaul TCP Link.

Containment Hierarchy of the Signaling Network

When Cisco MNM retrieves the current configuration from the active Cisco PGW 2200 Softswitch host, it establishes the containment hierarchy of the signaling network. Figure 1-7 shows some of the components in the signaling network.

Figure 1-7 Hierarchical Structure Example of Signaling Components

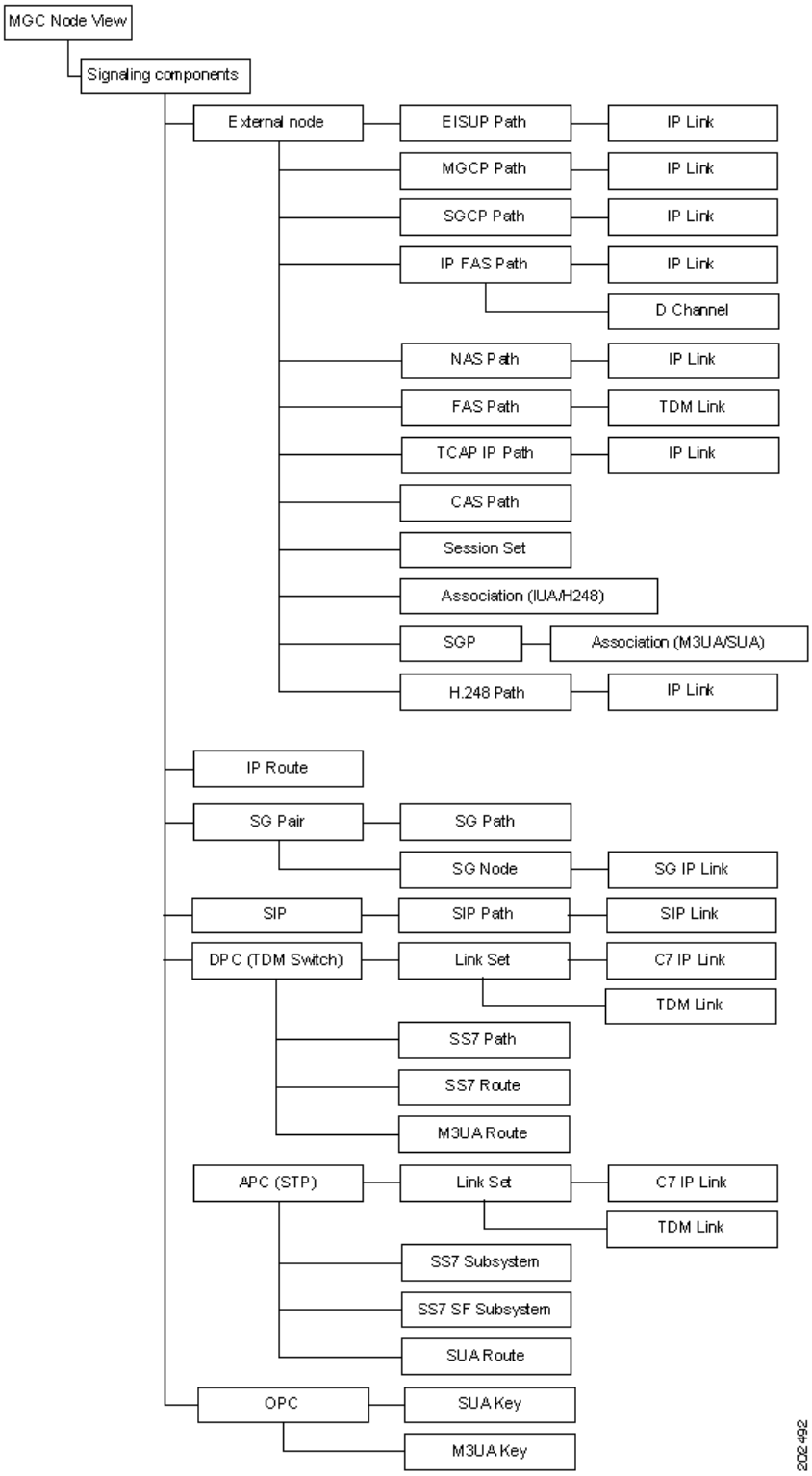

Note H.248 Path and Association (H248) are added under External Node in Release 2.7(3) Patch 2. In previous versions, these two features are not available under External Node.

In the MML file, the destination point code (DPC) component represents a switch. The adjacent point code (APC) component represents an STP.

The external node component in the MML file represents one of a number of different elements. These include

- Cisco CallManager
- Connected Cisco PGW 2200 Softswitches
- Interfaces of the Cisco PGW 2200 Softswitch (Cisco HSI)
- Media gateways
- RADIUS servers
- SS7 Service Control Points

Cisco PGW 2200 Softswitch Host Trunking Components

Cisco MNM builds models for all of the trunk groups on the active Cisco PGW 2200 Softswitch host and makes trunk information available to northbound systems. Trunks represent the physical bearer channels, and trunk groups provide a higher-level grouping of trunks.

Trunk group components are stored in a separate logical folder, the Trunking Components folder. When the Cisco PGW 2200 Softswitch host is using switched trunks, each trunk group is shown in the folder. In the case of nailed trunks, the Cisco PGW 2200 Softswitch host does not have any trunk groups, and so no folder is created.

Cisco MNM defines a different class for each type of trunking component. The attributes associated with each class typically match the attributes in the MML command used to provision the component.

The classes used to represent the trunking components in Cisco MNM are described in Table 1-3.

Table 1-3 Classes Representing Trunking Components

Class	Description
nailedtrnk	Nailed trunk component (signaling mode)
switchtrnk	Switched trunk component (call control mode)
trnkgrp	Trunk group component

Containment Hierarchy of the Trunking Components

When Cisco MNM retrieves the current configuration from the active Cisco PGW 2200 Softswitch host, it establishes the containment hierarchy of the trunking components. Figure 1-8 shows an example of the hierarchical structure of trunking components..

Figure 1-8 Hierarchical Structure Example of Trunking Components

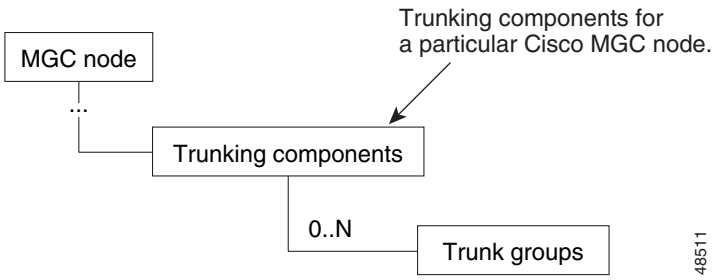

Cisco PGW 2200 Softswitch Host Dial Plan Components

Cisco MNM models the dial plan components on the active Cisco PGW 2200 Softswitch host. The dial plan allows the Cisco PGW 2200 Softswitch to perform pre-analysis, calling (A) number analysis, called (B) number analysis, and cause analysis. The routing components of the dial plan are used to identify the path for bearer traffic from the Cisco PGW 2200 Softswitch host to its adjacent switch.

Note Dial Plan Components on Cisco PGW 2200 Softswitch are no longer supported since Cisco MNM Release 2.7(3) Patch 4.

As with trunking components, dial plan components are stored in a separate folder.

Cisco MNM defines a class to represent each type of dial plan component. The attributes associated with each class typically match the attributes in the MML command used to provision the component.

Table 1-4 describes the classes used to represent the dial plan components in Cisco MNM.

Table 1-4 Classes Representing Dial Plan Components

Class	Description
ablack	Calling number not to be processed
adigtree	Entries for each calling (A) number
awhite	Calling number to be processed
bblack	Called numbers not to be processed
bdigtree	Entries for each called (B) number
bwhite	Called numbers to be processed
carriertbl	Carrier selection table (8.x only)
cause	Cause analysis
cliPrefix	CLI Prefix entry G4
cliIpAddress	CLI IP address entry
dialplan	MML dial plan
digmodstring	String of numbers to apply to an A or B number
h323IdDivFrom	H.323 ID, Division header or From field entry
location	Type of network that originates call

Table 1-4 Classes Representing Dial Plan Components (continued)

Class	Description
noa	Nature of address
npi	Numbering plan indicator
porttbl	Ported number table (8.x only)
anoa	Nature of address
anpi	Numbering plan indicator
bnoa	Nature of address
bnpi	Numbering plan indicator
resultset	Result set table
resulttable	Result of number analysis
rtlist	Route list
rttrnk	Routing trunk
rttrnkgrp	Routing trunk group
service	User-defined services for screening
termtbl	Number termination table (8.x only)
siprttrnkgrp	SIP routing trunk group

Containment Hierarchy of the Dial Plan Components

When Cisco MNM retrieves the current configuration from the active Cisco PGW 2200 Softswitch host, it establishes the containment hierarchy of the dial plan components. See Figure 1-9.

Figure 1-9 Hierarchical Model Example of Dial Plan Components

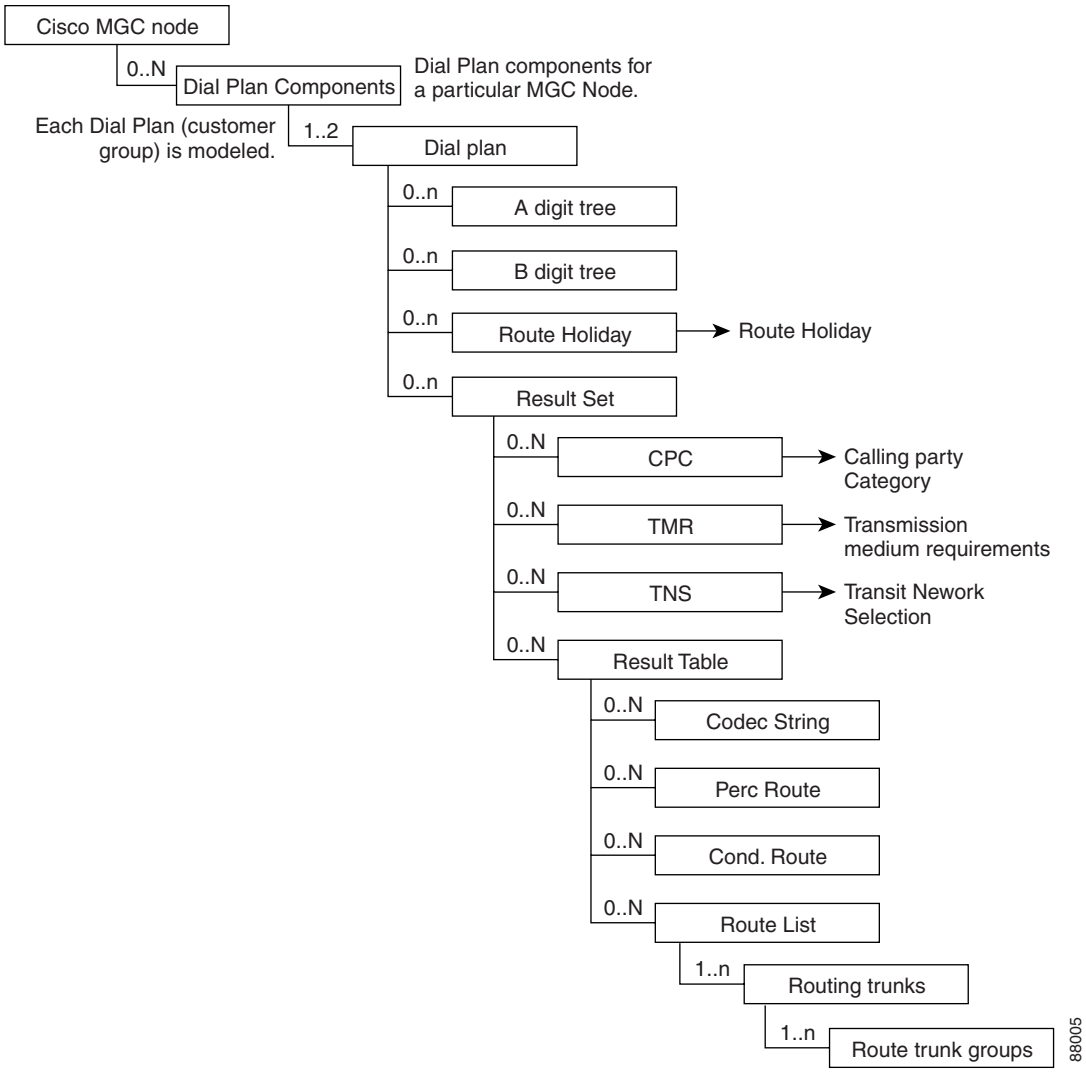

Host View

The host view displays all of the Cisco PGW 2200 Softswitch host devices along with their associated interfaces and system components, as illustrated in Figure 1-10.

Figure 1-10 Host View

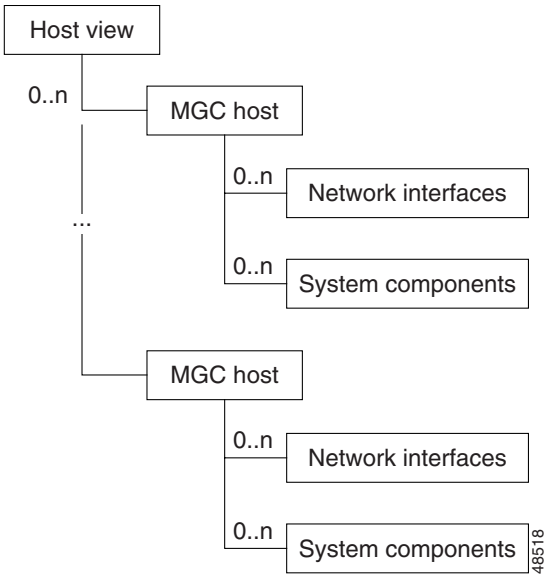

This view collects all Cisco PGW 2200 Softswitch hosts in a single location from which functions can be opened.

ITP-L View

The ITP-L view displays all of the Cisco ITP-L devices in the network along with their associated interfaces, as illustrated in Figure 1-11.

Figure 1-11 ITP-L View

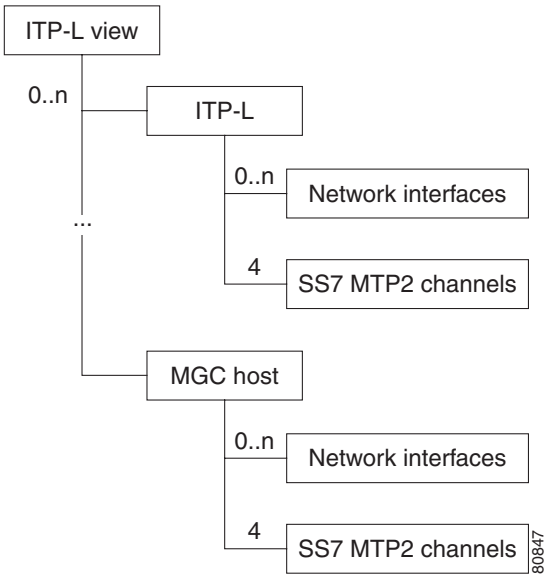

This view is used to collect all Cisco ITP-Ls in a single location.

Note Cisco MNM 2.3(2) and later releases support ITP-L functions integrated in the Cisco AS5350 and AS5400 access servers. When Cisco MNM is the only element manager managing the server, the functionality is referred to as an integrated ITP-L. In previous releases, the ITP-L functionality was referred to as an integrated ITP-L for coresident EMs, but there are no longer any co-resident EMs for AS5x00. Unless otherwise noted, the term ITP-L describes any of these configurations.

Switch View

The switch view displays all of the LAN switches in the network. In addition, the slots and ports on the LAN switches are displayed, as illustrated in Figure 1-12.

Figure 1-12 LAN Switch View

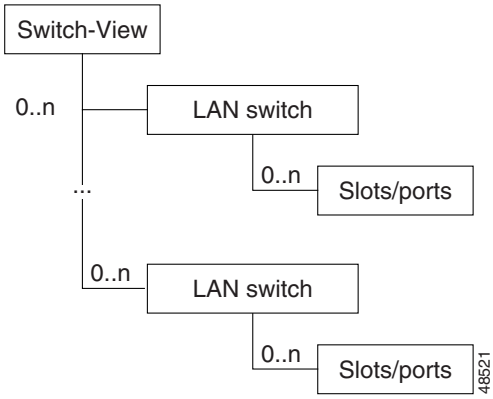

This view is used to collect all LAN switches in a single location for viewing events or starting functions.

BAMS View

The BAMS view displays all of the Cisco BAMS in the network. For each Cisco BAMS, the network interfaces of the BAMS are displayed. In addition, each Cisco PGW 2200 Softswitch host that is communicating with the Cisco BAMS is shown, as illustrated in Figure 1-13.

Figure 1-13 BAMS View

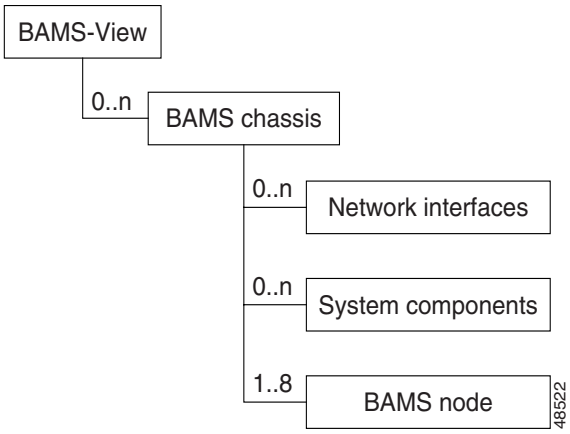

Each Cisco BAMS in the network is displayed, along with its network interfaces and system components. This view is used to collect all Cisco BAMS in a single location from which functions can be opened.

HSI View

The HSI view displays all Cisco HSIs in the network. For each Cisco HSI, the network interfaces and the associated IP addresses and system components are displayed. This view is used to view faults and start services.

Figure 1-14 HSI View

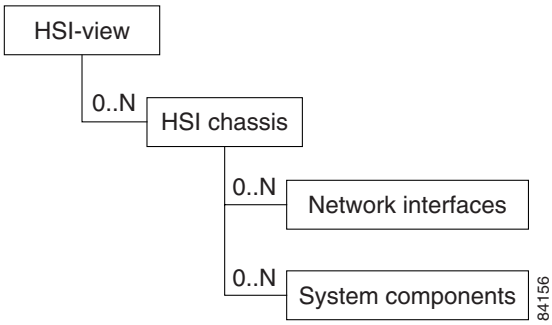

Physical View

Cisco MNM uses the physical view to represent the physical location of devices. You can set up different types of groupings based on the physical layout of your network.

You can create sites and regions to represent the physical locations of devices in your network. When Cisco PGW 2200 Softswitch node devices are deployed, you can specify the physical location of these devices in one of the predefined regions or sites. The physical view can be used to quickly see which network elements are at a given location. If a device fails, NOC operators can easily see where personnel should be dispatched.

An example of the physical view is shown in Figure 1-15.

Figure 1-15 Physical View

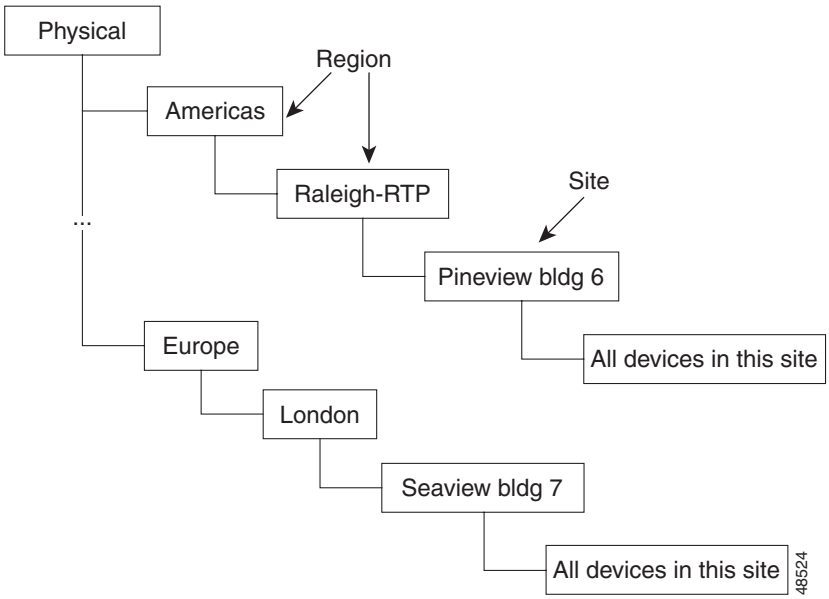

During deployment, devices are placed in each region or site. Relationships between objects at a given site are not shown (these relationships are shown in other views); all devices in a given site are at the same level. Because the Cisco PGW 2200 Softswitch node is not a physical device, it is not represented in this view.

Network View

The network view groups all IP-enabled devices in containers based on their subnet address, as illustrated in Figure 1-16. This view represents a standard Cisco EMF that is not controlled by Cisco MNM.
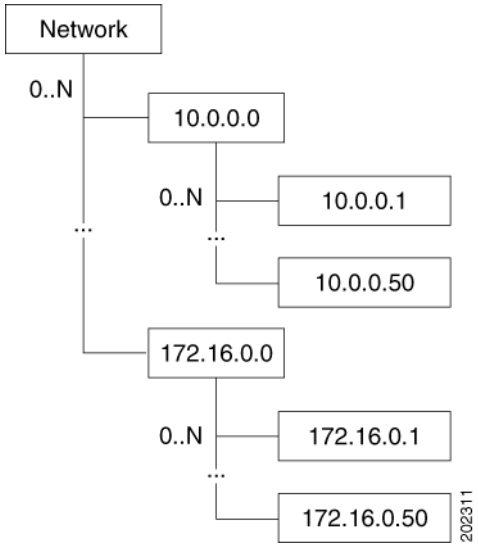
Figure 1-16 Network View