NextPort Dual-Filter G.168 Echo Canceller White Paper

This white paper describes the new dual-filter G.168 echo canceller improvements that have been added to the Cisco AS5350, Cisco AS5400, Cisco AS5400HPX, and Cisco AS5850 voice gateways.

Contents

- Echo Cancellation, page 1
- New Dual-Filter G.168 Echo Canceller, page 3
- Benefits of the Dual-Filter G.168 Echo Canceller, page 4
- Related Documentation, page 5

Echo Cancellation

During some telephone conversations, a person can hear a delayed version of their own voice emanating from their telephone receiver; this is the phenomenon known as “talker echo.” The louder the talker echo is (and the longer the delay in the echo path), the more annoying the echo becomes to the listener. Echo cancellers (ECs) are devices that attempt to reduce the volume of an echo to make it less annoying. The longer the delay in the echo path, the more important the echo cancellation becomes. Since the packetization and speech coding in packet-based voice networks tend to add delay in the voice path, a high-quality EC is desirable.

Typical Echo Cancellation Scenario

Figure 1 shows a generic echo canceller scenario. In a typical EC, the echo is cancelled in two stages. The first stage uses an adaptive filter that learns to predict the echo. When the echo prediction is subtracted from the incoming signal, the echo in the signal is reduced. The second stage uses controlled attenuation to remove any non-linear echo components that cannot be accurately predicted by the adaptive filter. This second stage is called the non-linear processor (NLP).

Corporate Headquarters:
Cisco Systems, Inc., 170 West Tasman Drive, San Jose, CA 95134-1706 USA

The two other primary functions in an echo canceller are called “double-talk detection” and “comfort noise generation (CNG).” The echo canceller needs to perform different functions during different periods of a call, as shown in Figure 2.

Figure 1 Typical Echo Cancellation

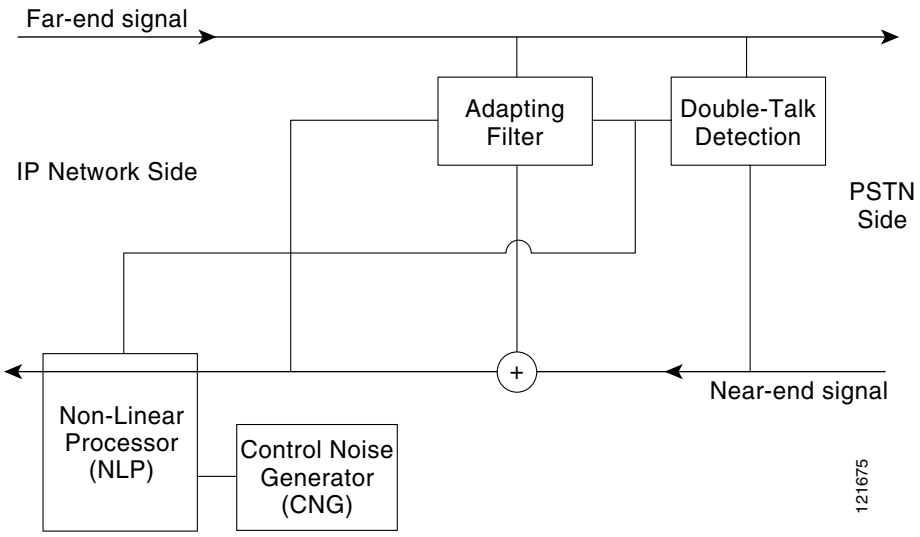

Figure 2 Echo Canceller Functions

	FE Silent	FE Speaking
NE Speaking	**NE Speech** (PSTN side) No Adaptation NLP Disengaged	**Double Talk** No Adaptation NLP Disengaged
NE Silent	**Silence** Adapt on Noise (Sub-optimal) NLP State Implementation Varies Measure NE noise levels	**FE Speech** (IP side) Adapt on Voice (Best) NLP Engaged

121676

Double-Talk Detection

Most calls contain both periods of silence when only one of the two talkers is speaking and periods of double talk. Double talk is any period during a call when both the near-end signal and the far-end signal contain speech. Both the adaptive filter and the NLP need to know when double talk is occurring for reasons discussed below. The double-talk detector tells these blocks when a period of double talk is occurring.

Adaptive Filter

The adaptive filter learns the echo during periods when the person on the far end is speaking. Whenever this occurs, there is an echo of the speech arriving at the near end. The adaptive filter correlates these two signals to learn and then predict the echo. However, if the person at the near end also speaks (double talk), the adaptive filter must slow or stop adaptation or the signals will diverge.

Non-Linear Processor

The NLP adds attenuation to the near-end signal after the echo is removed by the adaptive filter. When this attenuation is added, the residual echo is attenuated along with all signals that enter from the near end. This includes the residual echo, thermal noise on the phone lines, acoustic noise picked up by the telephone receiver, and near-end speech. The goal is to remove only the echo if possible. To achieve this, the NLP must not attenuate the signal during periods of double talk. Also, whenever the NLP attenuates the signal, the signal from the comfort noise generation (CNG) block is allowed to replace the noise signal that it attenuates.

Comfort Noise

The comfort noise block estimates and then replicates the noise level that occurs on the near-end signal. The measurement of near-end noise level should be done only during periods when both speakers are silent; otherwise speech or echo energy will be included in the noise-level estimate.

New Dual-Filter G.168 Echo Canceller

There are several architectural changes that have given the new EC the ability to better remove echo. The central change is that the new EC uses a dual-filter design to better learn and predict the echo. One of the filters adapts by attempting to learn the echo, while the other filter makes the echo prediction used for excess echo removal. The filter coefficients learned by the adapting filter are copied to the predicting filter only when the coefficient control block determines that the new set of coefficients is better than the set that the predicting filter is using. By using this method, any divergence during the learning process is insulated from the near-end signal that is being processed. This allows the adapting filter to learn more aggressively and the prediction to be more stable. Figure 3 shows a dual-filter G.168 EC scenario.

Figure 3 Dual-Filter G.168 Echo Canceller

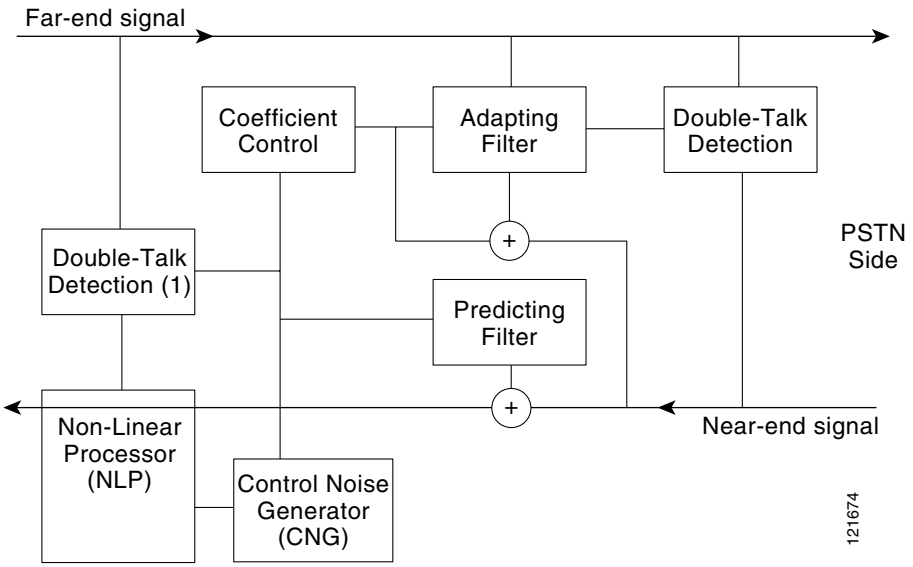

Because the echo prediction is more stable with the dual-filter EC, the method of double-talk detection used can take into account the echo characteristics learned by the filters. For this reason, the new EC has split its double-talk detection into two blocks.

The first double-talk detector (marked Double-Talk Detection (I) in the block diagram above) tells the adapting filter when to adapt. This detector uses only the signals prior to echo removal to determine when double-talk occurs. Because the adaptive filter does not directly affect the listeners, the detector can more conservatively declare a double-talk condition. This allows the adapting filter to perform better in environments where echo levels approach near-end talker levels.

The second double-talk detector (Double-Talk Detection (II) above) is used only to tell the NLP when to engage. This detector uses the signal at the output of the predicting filter to better discriminate between periods of near-end speech and echo. The performance of the predicting filter is monitored, and the threshold of the second double-talk detector adapts as the echo cancellation improves. The NLP will, therefore, be less likely to engage at the improper time, and near-end clipping will occur less often.

An additional effect of these improvements in double-talk detection is that the echo canceller will report statistics better. One of the difficulties in reporting statistics is that they need to be measured at the right time. Measuring echo levels when near-end speech is occurring causes echo-level measurement to be skewed. The new double-talk detection methods provide a better indication of when to measure each statistic.

Improvements were also made to the CNG. Studies have shown the typical spectral shape of most commonly occurring acoustic noise, which is known as “Hoth noise.” Hoth noise is a low-end Gaussian noise with a frequency spectrum similar to voice. The spectrum of the CNG noise has been updated in the new echo canceller to reflect this noise shape. This change results in a CNG noise that is more pleasing to listeners in most calls.

Benefits of the Dual-Filter G.168 Echo Canceller

The new dual-filter G.168 EC provides the following voice system enhancements:

- Better echo removal
- Greater cancellation stability

- Better echo canceller statistics
- Improved functionality working in a wide range of PSTN environments
- No hardware changes
- Availabitilty as a no-cost standalone SPE firmware upgrade

Related Documentation

- Cisco IOS Voice Configuration Library
- NextPort SPE Release Notes index
- *NextPort Voice Tuning and Background Noise Statistics with NextPort Dual-Filter G.168 Echo Cancellation*
- *Voice Port Configuration*