Multimedia Tap System

Installation and Operation Guide

For Your Safety

Explanation of Warning and Caution Icons



Avoid personal injury and product damage! Do not proceed beyond any symbol until you fully understand the indicated conditions.

The following warning and caution icons alert you to important information about the safe operation of this product:



You may find this symbol in the document that accompanies this product. This symbol indicates important operating or maintenance instructions.



You may find this symbol affixed to the product. This symbol indicates a live terminal where a dangerous voltage may be present; the tip of the flash points to the terminal device.



You may find this symbol affixed to the product. This symbol indicates a protective ground terminal.



You may find this symbol affixed to the product. This symbol indicates a chassis terminal (normally used for equipotential bonding).



You may find this symbol affixed to the product. This symbol warns of a potentially hot surface.



You may find this symbol affixed to the product and in this document. This symbol indicates an infrared laser that transmits intensity-modulated light and emits invisible laser radiation or an LED that transmits intensity-modulated light.

Important

Please read this entire guide. If this guide provides installation or operation instructions, give particular attention to all safety statements included in this guide.

Notices

Trademark Acknowledgments

Cisco and the Cisco logo are trademarks or registered trademarks of Cisco and/or its affiliates in the U.S. and other countries. To view a list of cisco trademarks, go to this URL: **www.cisco.com/go/trademarks**.
Third party trademarks mentioned are the property of their respective owners.
The use of the word partner does not imply a partnership relationship between Cisco and any other company. (1110R)

Publication Disclaimer

Cisco Systems, Inc. assumes no responsibility for errors or omissions that may appear in this publication. We reserve the right to change this publication at any time without notice. This document is not to be construed as conferring by implication, estoppel, or otherwise any license or right under any copyright or patent, whether or not the use of any information in this document employs an invention claimed in any existing or later issued patent.

Copyright

© 2008, 2012 Cisco and/or its affiliates. All rights reserved. Printed in the United States of America.
Information in this publication is subject to change without notice. No part of this publication may be reproduced or transmitted in any form, by photocopy, microfilm, xerography, or any other means, or incorporated into any information retrieval system, electronic or mechanical, for any purpose, without the express permission of Cisco Systems, Inc.

Contents

Important Safety Instructions iv

Chapter 1 Introducing the Multimedia Tap System with PDU

Overview 1-1
Multimedia Tap System 1-2
Multimedia Tap Illustrations 1-4
Power Distribution Unit 1-8

Chapter 2 Installing the Multimedia Tap System

Overview 2-1
Preparing for Installation 2-3
Removing the Faceplate 2-5
Installing the Multimedia Tap Housing on a Strand 2-8
Installing the Multimedia Tap Housing on a Pedestal 2-11
Mounting the Faceplate 2-14
Installing the Power Distribution Unit (PDU) 2-17
Installing the Coax PDU 2-18
Installing the Twisted Pair PDU 2-25

Chapter 3 Customer Information

Overview 3-1
Product Support 3-2
Return Products for Repair 3-4

Appendix A Technical Information

Overview A-1
Specifications A-2
Part Numbers A-4

Glossary Glossary-1

Index Index-1

Important Safety Instructions

Read and Retain Instructions

Carefully read all safety and operating instructions before operating this equipment, and retain them for future reference.

Follow Instructions and Heed Warnings

Follow all operating and use instructions. Pay attention to all warnings and cautions in the operating instructions, as well as those that are affixed to this equipment.

Terminology

The terms defined below are used in this document. The definitions given are based on those found in safety standards.

Service Personnel - The term *service personnel* applies to trained and qualified individuals who are allowed to install, replace, or service electrical equipment. The service personnel are expected to use their experience and technical skills to avoid possible injury to themselves and others due to hazards that exist in service and restricted access areas.

User and Operator - The terms *user* and *operator* apply to persons other than service personnel.

Ground(ing) and Earth(ing) - The terms *ground(ing)* and *earth(ing)* are synonymous. This document uses ground(ing) for clarity, but it can be interpreted as having the same meaning as earth(ing).

Electric Shock Hazard

This equipment meets applicable safety standards.

> ⚠ **WARNING:**
>
> **Avoid electric shock! Opening or removing the equipment cover may expose you to dangerous voltages. Refer all servicing to qualified service personnel only.**

Electric shock can cause personal injury or even death. Avoid direct contact with dangerous voltages at all times.

Know the following safety warnings and guidelines:

- Only qualified service personnel are allowed to perform equipment installation or replacement.
- Only qualified service personnel are allowed to remove equipment covers and access any of the components inside the chassis.

Equipment Placement

> ⚠ **WARNING:**
>
> **Avoid personal injury and damage to this equipment. An unstable mounting surface may cause this equipment to fall.**

To protect against equipment damage or injury to personnel, comply with the following:

- Install this equipment in a restricted access location (access restricted to service personnel).
- Make sure the mounting surface or rack is stable and can support the size and weight of this equipment.

Strand (Aerial) Installation

⚠ CAUTIONS:

- **Be aware of the size and weight of strand-mounted equipment during the installation operation.**
- **Ensure that the strand can safely support the equipment's weight.**

Pedestal, Service Closet, Equipment Room or Underground Vault Installation

⚠ WARNING:

Avoid the possibility of personal injury. Ensure proper handling/lifting techniques are employed when working in confined spaces with heavy equipment.

- Ensure this equipment is securely fastened to the mounting surface or rack where necessary to protect against damage due to any disturbance and subsequent fall.
- Ensure the mounting surface or rack is appropriately anchored according to manufacturer's specifications.
- Ensure the installation site meets the ventilation requirements given in the equipment's data sheet to avoid the possibility of equipment overheating.
- Ensure the installation site and operating environment is compatible with the equipment's International Protection (IP) rating specified in the equipment's data sheet.

Connecting to Utility AC Power

Important: If this equipment is a Class I equipment, it must be grounded.

- If this equipment plugs into an outlet, the outlet must be near this equipment, and must be easily accessible.
- Connect this equipment only to the power sources that are identified on the equipment-rating label, which is normally located close to the power inlet connector(s).
- This equipment may have two power sources. Be sure to disconnect all power sources before working on this equipment.
- If this equipment **does not** have a main power switch, the power cord connector serves as the disconnect device.
- Always pull on the plug or the connector to disconnect a cable. Never pull on the cable itself.

Connection to Network Power Sources

Refer to this equipment's specific installation instructions in this manual or in companion manuals in this series for connection to network ferro-resonant AC power sources.

AC Power Shunts

AC power shunts may be provided with this equipment.

Important: The power shunts (where provided) must be removed before installing modules into a powered housing. With the shunts removed, power surge to the components and RF-connectors is reduced.

> ⚠ **CAUTION:**
>
> **RF connectors and housing seizure assemblies can be damaged if shunts are not removed from the equipment before installing or removing modules from the housing.**

Grounding (Utility AC Powered Equipment in Pedestals, Service Closets, etc.)

This section provides instructions for verifying that the equipment is properly grounded.

Safety Plugs (USA Only)

This equipment is equipped with either a 3-terminal (grounding-type) safety plug or a 2-terminal (polarized) safety plug. The wide blade or the third terminal is provided for safety. Do not defeat the safety purpose of the grounding-type or polarized safety plug.

To properly ground this equipment, follow these safety guidelines:

- **Grounding-Type Plug** - For a 3-terminal plug (one terminal on this plug is a protective grounding pin), insert the plug into a grounded mains, 3-terminal outlet.

  Note: This plug fits only one way. If this plug cannot be fully inserted into the outlet, contact an electrician to replace the obsolete 3-terminal outlet.

- **Polarized Plug** - For a 2-terminal plug (a polarized plug with one wide blade and one narrow blade), insert the plug into a polarized mains, 2-terminal outlet in which one socket is wider than the other.

  Note: If this plug cannot be fully inserted into the outlet, try reversing the plug. If the plug still fails to fit, contact an electrician to replace the obsolete 2-terminal outlet.

Grounding Terminal

If this equipment is equipped with an external grounding terminal, attach one end of an 18-gauge wire (or larger) to the grounding terminal; then, attach the other end of the wire to a ground, such as a grounded equipment rack.

Safety Plugs (European Union)

- **Class I Mains Powered Equipment –** Provided with a 3-terminal AC inlet and requires connection to a 3-terminal mains supply outlet via a 3-terminal power cord for proper connection to the protective ground.

  Note: The equipotential bonding terminal provided on some equipment is not designed to function as a protective ground connection.

- **Class II Mains Powered Equipment –** Provided with a 2-terminal AC inlet that may be connected by a 2-terminal power cord to the mains supply outlet. No connection to the protective ground is required as this class of equipment is provided with double or reinforced and/or supplementary insulation in addition to the basic insulation provided in Class I equipment.

  Note: Class II equipment, which is subject to EN 50083-1, is provided with a chassis mounted equipotential bonding terminal. See the section titled **Equipotential Bonding** for connection instructions.

Equipotential Bonding

If this equipment is equipped with an external chassis terminal marked with the IEC 60417-5020 chassis icon (), the installer should refer to CENELEC standard EN 50083-1 or IEC standard IEC 60728-11 for correct equipotential bonding connection instructions.

General Servicing Precautions

WARNING:

Avoid electric shock! Opening or removing this equipment's cover may expose you to dangerous voltages.

CAUTION:

These servicing precautions are for the guidance of qualified service personnel only. To reduce the risk of electric shock, do not perform any servicing other than that contained in the operating instructions unless you are qualified to do so. Refer all servicing to qualified service personnel.

Be aware of the following general precautions and guidelines:

- **Servicing** - Servicing is required when this equipment has been damaged in any way, such as power supply cord or plug is damaged, liquid has been spilled or objects have fallen into this equipment, this equipment has been exposed to rain or moisture, does not operate normally, or has been dropped.
- **Wristwatch and Jewelry** - For personal safety and to avoid damage of this equipment during service and repair, do not wear electrically conducting objects such as a wristwatch or jewelry.

- **Lightning** - Do not work on this equipment, or connect or disconnect cables, during periods of lightning.
- **Labels** - Do not remove any warning labels. Replace damaged or illegible warning labels with new ones.
- **Covers -** Do not open the cover of this equipment and attempt service unless instructed to do so in the instructions. Refer all servicing to qualified service personnel only.
- **Moisture** - Do not allow moisture to enter this equipment.
- **Cleaning** - Use a damp cloth for cleaning.
- **Safety Checks** - After service, assemble this equipment and perform safety checks to ensure it is safe to use before putting it back into operation.

Electrostatic Discharge

Electrostatic discharge (ESD) results from the static electricity buildup on the human body and other objects. This static discharge can degrade components and cause failures.

Take the following precautions against electrostatic discharge:

- Use an anti-static bench mat and a wrist strap or ankle strap designed to safely ground ESD potentials through a resistive element.
- Keep components in their anti-static packaging until installed.
- Avoid touching electronic components when installing a module.

Fuse Replacement

To replace a fuse, comply with the following:

- Disconnect the power before changing fuses.
- Identify and clear the condition that caused the original fuse failure.
- Always use a fuse of the correct type and rating. The correct type and rating are indicated on this equipment.

Lithium Battery

For equipment with a lithium battery, observe the following rules:

- Do not dispose of used batteries through the regular garbage collection system, but follow the local regulations. The batteries may contain substances that could be harmful to the environment.
- Replace batteries with the same or equivalent type recommended by Cisco.
- Insert batteries correctly. There may be a risk of explosion if the batteries are incorrectly inserted.
- When disposing of this equipment, remove the batteries and dispose of them separately in accordance with local regulations.
- Do not recharge the batteries or expose them to temperatures above 100°C (212°F).

EMC

Where this equipment is subject to USA FCC and/or Industry Canada rules, the following statements apply:

FCC Statement for Class A Equipment

This equipment has been tested and found to comply with the limits for a Class A digital device, pursuant to Part 15 of the FCC Rules. These limits are designed to provide reasonable protection against harmful interference when this equipment is operated in a commercial environment.

This equipment generates, uses, and can radiate radio frequency energy and, if not installed and used in accordance with the instruction manual, may cause harmful interference to radio communications. Operation of this equipment in a residential area is likely to cause harmful interference in which case users will be required to correct the interference at their own expense.

Industry Canada – Industrie Canadienne Statement

This apparatus complies with Canadian ICES-003.
Cet appareil est confome à la norme NMB-003 du Canada.

CENELEC/CISPR Statement with Respect to Class A Information Technology Equipment

This is a Class A equipment. In a domestic environment this equipment may cause radio interference in which case the user may be required to take adequate measures.

Modifications

This equipment has been designed and tested to comply with applicable safety, laser safety, and EMC regulations, codes, and standards to ensure safe operation in its intended environment.

Do not make modifications to this equipment. Any changes or modifications could void the user's authority to operate this equipment.

Modifications have the potential to degrade the level of protection built into this equipment, putting people and property at risk of injury or damage. Those persons making any modifications expose themselves to the penalties arising from proven non-compliance with regulatory requirements and to civil litigation for compensation in respect of consequential damages or injury.

Accessories

Use only attachments or accessories specified by the manufacturer.

Chapter 1
Introducing the Multimedia Tap System with PDU

Overview

Introduction

This guide provides the procedures for installing a Multimedia Tap with a Power Distribution Unit (PDU).

Qualified Personnel

Only appropriately qualified and skilled personnel should attempt to install, operate, maintain, and service this product.

> ⚠ **WARNING:**
>
> **Allow only qualified and skilled personnel to install, operate, maintain, and service this product. Otherwise, personal injury or equipment damage may occur.**

In This Chapter

This chapter introduces you to the Multimedia Tap System and the two components that make up the system. This chapter contains the following topics.

Topic	See Page
Multimedia Tap System	1-2
Multimedia Tap Illustrations	1-4
Power Distribution Unit	1-8

Multimedia Tap System

Overview

The Multimedia Tap System provides the subscriber with drop powering capability that is required to support broadband telephony in hybrid fiber/coax (HFC) networks. In addition, the Multimedia Tap System provides enhanced reliability features that are essential to successful video and telephony service delivery.

Multimedia Tap System Diagrams

The Multimedia Tap System consists of the Multimedia Tap (faceplate and housing) and the Power Distribution Unit (PDU). There are two types of PDUs, coax power and twisted pair power. See **Types of PDUs** later in this chapter for a full description. The complete Multimedia Tap System for each PDU is shown in the following illustrations.

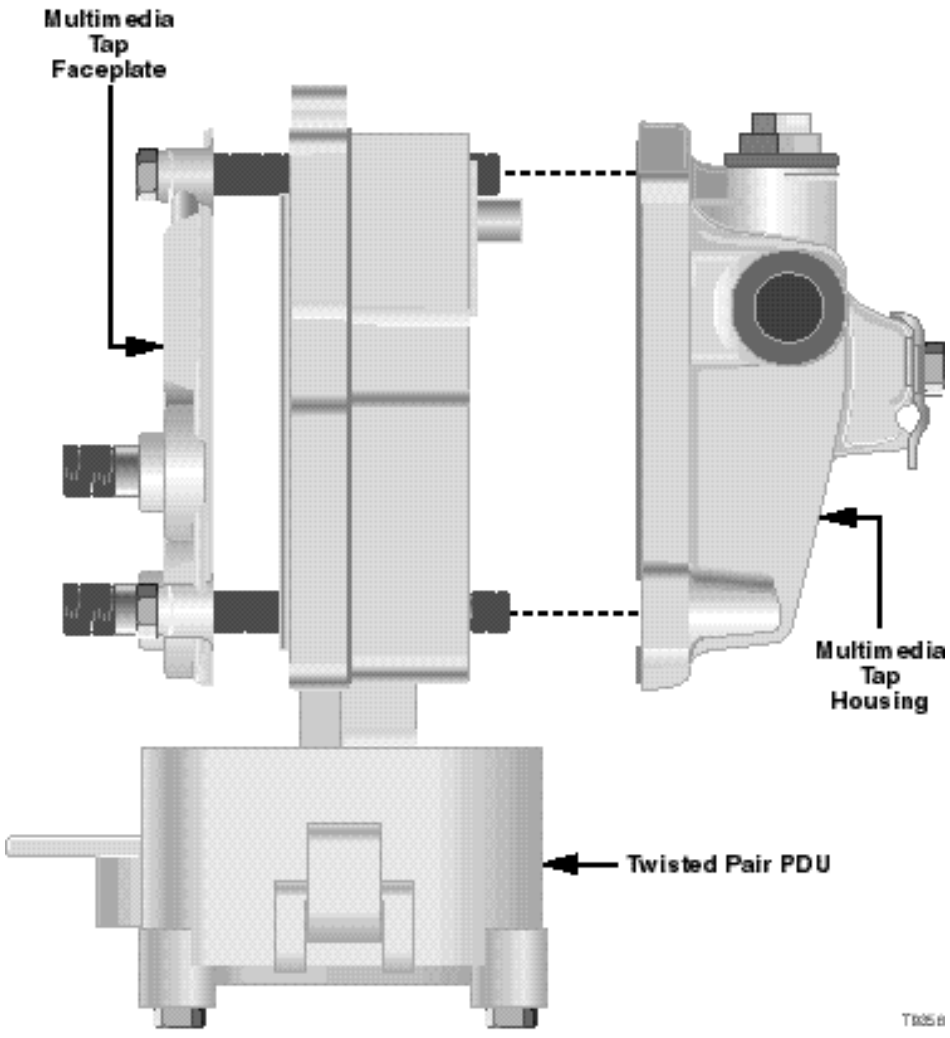

Continued on next page

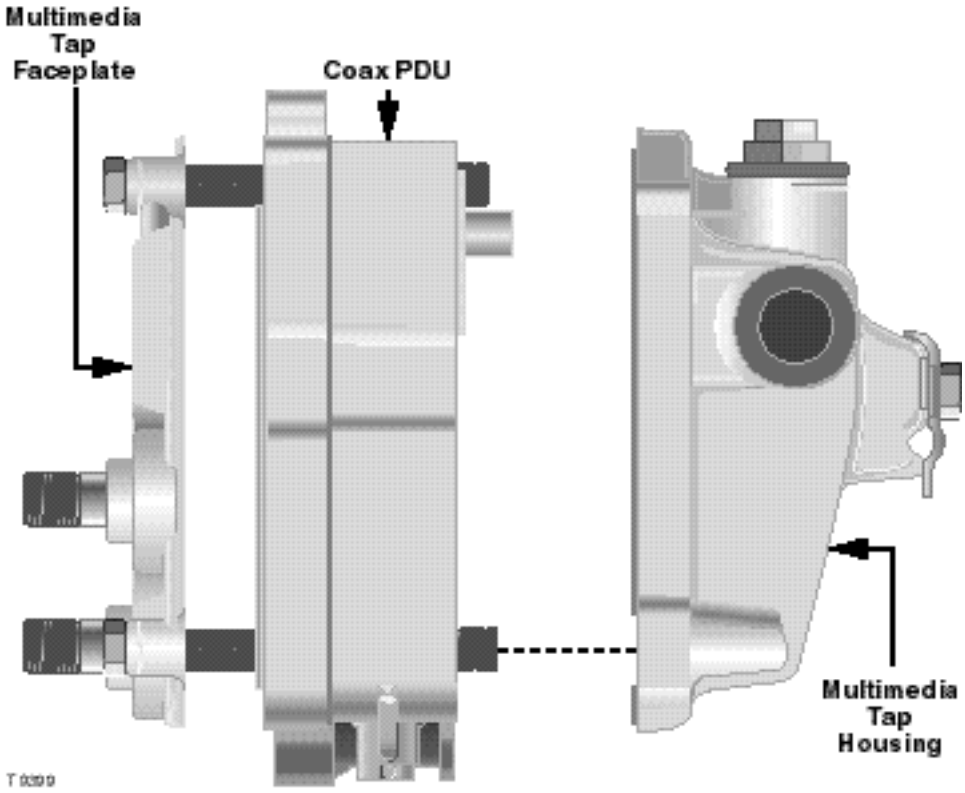

Features of the Multimedia Tap

The Multimedia Tap faceplate and housing is similar in form, fit, and function to traditional taps. However, the new Multimedia Tap offers a variety of enhanced features essential to the successful delivery of telephony and other advanced services.

The following are features of the Multimedia Tap.

- Connection Beam AC/RF bypass switch
- 12 amperes through current rating
- Power injection posts
- Economical two-step upgrade to customer drop power passing capability
- AC blocking capacitors on each port

Continued on next page

Multimedia Tap Illustrations

2/4-way Multimedia Tap Housing

The following illustration shows the 2/4-way Multimedia Tap housing.

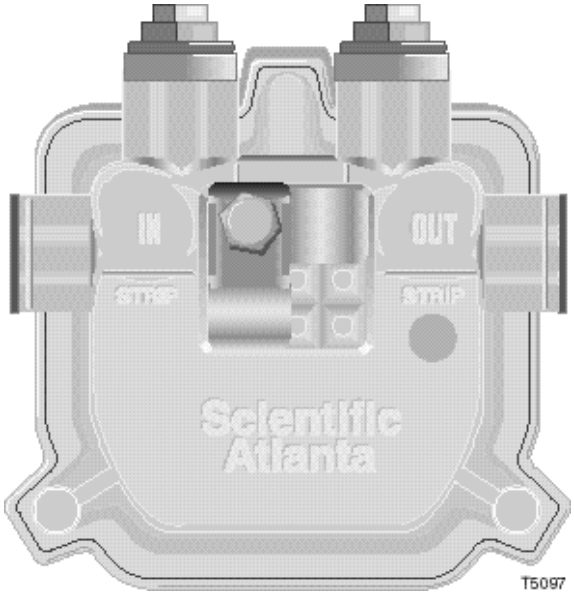

8-way Multimedia Tap Housing

The following illustration shows the 8-way Multimedia Tap housing.

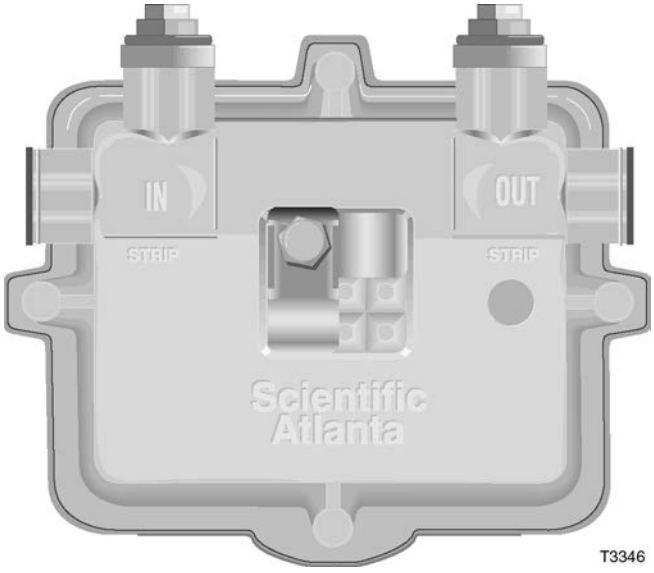

Continued on next page

2/4-way Multimedia Tap Faceplate

The following illustration shows the 4-way Multimedia Tap faceplate installed on the housing.

Note: The 2-way version is identical except that F-ports 3 and 4 are not installed.

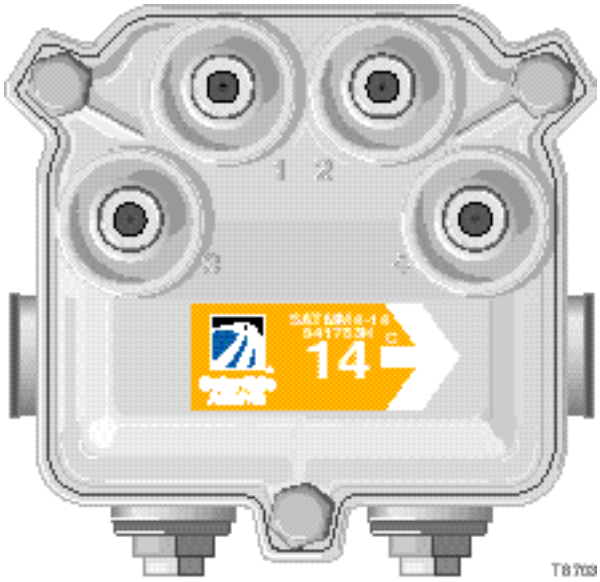

8-way Multimedia Tap Faceplate

The following illustration shows the 8-way Multimedia Tap faceplate installed on the housing.

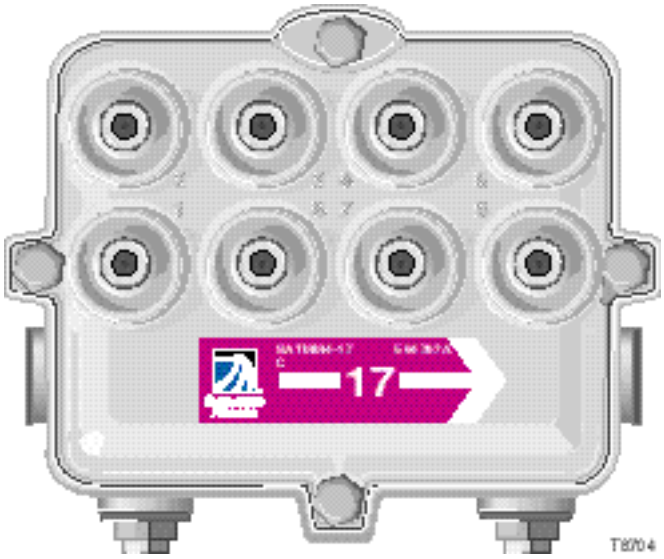

Continued on next page

2/4-way Full View Multimedia Tap with Twisted Pair PDU

The following illustration shows the full view of the 4-way Multimedia Tap with a Twisted Pair PDU.

Note: The 2-way version is identical except that F-ports 3 and 4 are not installed.

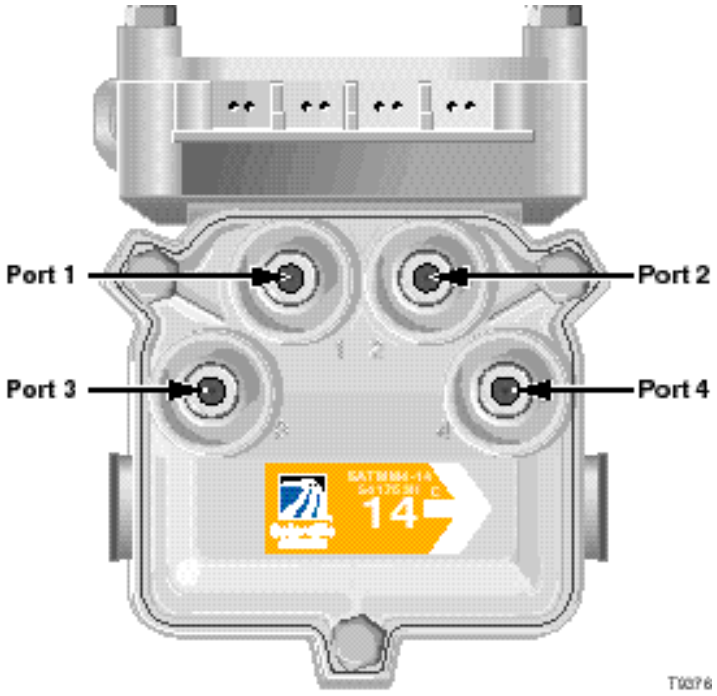

2/4-way Full View Multimedia Tap with Coax PDU

The following illustration shows the full view of the 4-way Multimedia Tap with a Coax PDU.

Note: The 2-way version is identical except that F-ports 3 and 4 are not installed.

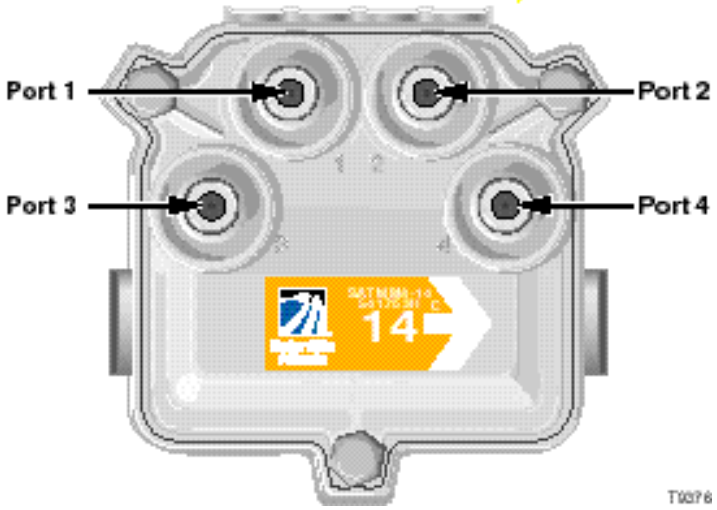

Continued on next page

8-way Full View Multimedia Tap with Twisted Pair PDU

The following illustration shows the full view of the 8-way Multimedia Tap with a Twisted Pair PDU.

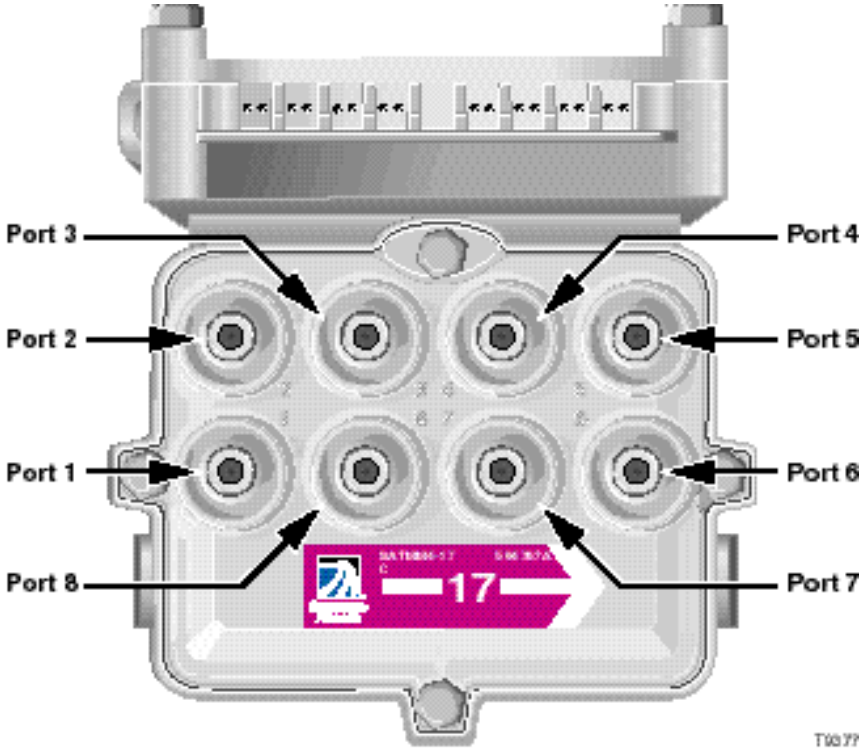

8-way Full View Multimedia Tap with Coax PDU

The following illustration shows the full view of the 8-way Multimedia Tap with a Coax PDU.

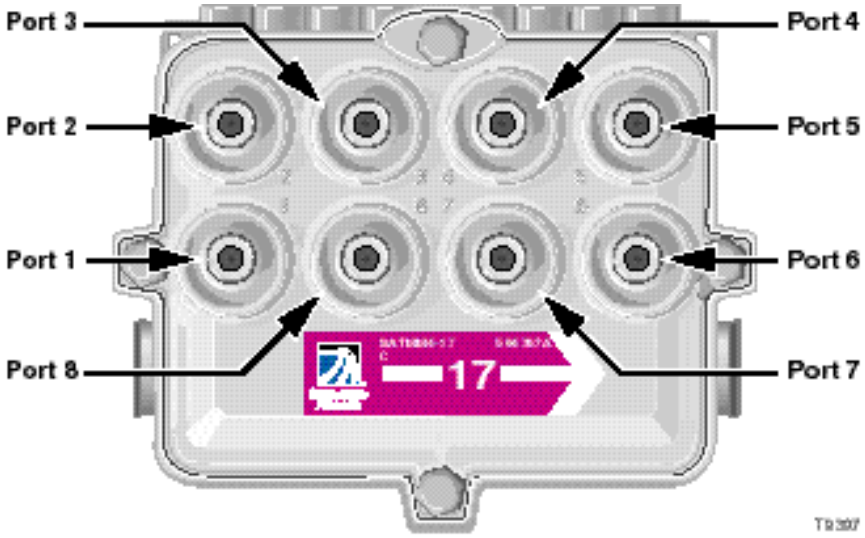

Power Distribution Unit

Introduction

The Power Distribution Unit (PDU) upgrades any Scientific-Atlanta Multimedia Tap to allow subscriber drop powering capability.

A PDU can be installed on a Multimedia Tap housing.

Note: A PDU cannot be used on an existing Scientific-Atlanta non-multimedia tap system. See your Scientific-Atlanta representative for further details.

Types of PDUs

The following table lists the two types of PDUs and their descriptions.

PDU	Description
Coax power	Couples the AC power on to the coaxial subscriber drop cable
Twisted pair power	Requires a composite drop cable that contains a coaxial cable for the RF signal and a twisted pair for the AC power

Note: Both coax and twisted pair power versions are available in 2/4-way and 8-way versions.

Features of the PDU

The following features of the PDU are available in 2/4-way and 8-way versions.

- Available in twisted pair and coaxial drop powering versions
- Compatible with Scientific-Atlanta Multimedia Tap
- Provides uninterrupted downstream subscriber service during tap faceplate removal
- Current limiting using positive temperature coefficient (PTC) resistors on a per-port basis for maximum network reliability and subscriber safety. For the twisted pair version, (PTC) resistors sold separately or permanently installed (PDU part numbers 750595 or 750596)
- Coaxial drop conveniently and easily activated by a patented mechanical switch
- Advanced gasketing technology ensures reliability in aerial, pedestal, and vault deployments
- Insulation Displacement Connector (IDC) for fast and reliable wire connection for twisted pair powering

Continued on next page

2/4-way Twisted Pair PDU

The following diagram shows the front and back view of the 2/4-way Twisted Pair PDU.

Note: The 8-way twisted pair is similar.

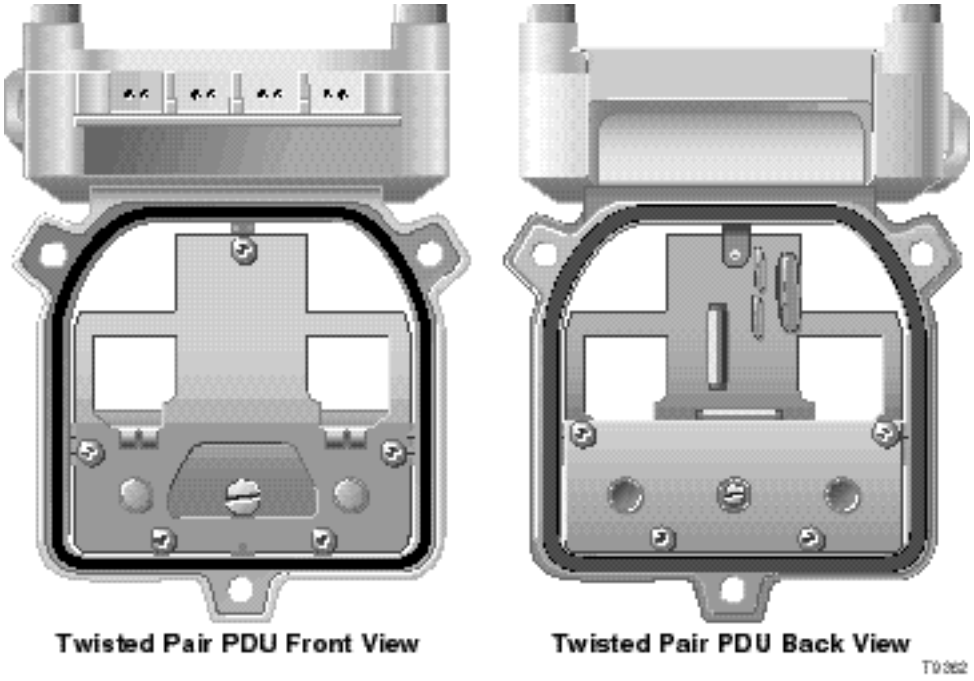

2/4-way Coax PDU

The following diagram shows the front and back view of the 2/4-way Coax PDU.

Note: The 8-way coax PDU is similar.

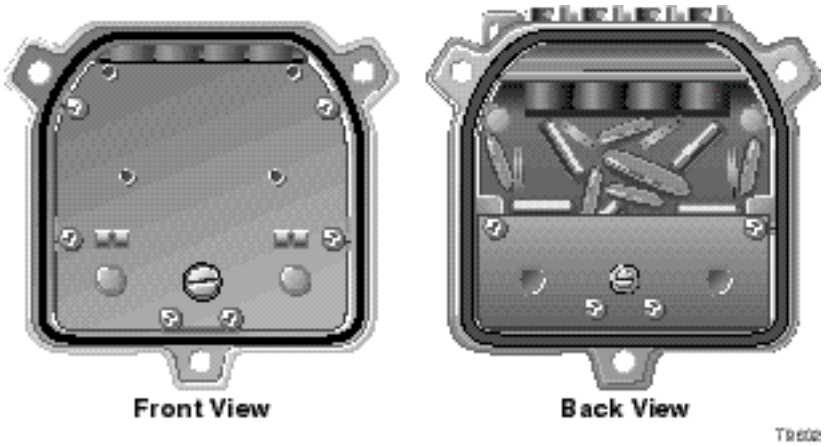

Chapter 2
Installing the Multimedia Tap System

Overview

Overview

This chapter provides instructions for installing the Multimedia Tap System in your cable system.

Qualified Personnel

Only appropriately qualified and skilled personnel should attempt to install, operate, maintain, and service this product.

> ⚠ **WARNING:**
>
> **Allow only qualified and skilled personnel to install, operate, maintain, and service this product. Otherwise, personal injury or equipment damage may occur.**

In This Chapter

The following topics are covered in this chapter.

Topic	See Page
Preparing for Installation	2-3
Removing the Faceplate	2-5
Installing the Multimedia Tap on a Strand	2-8
Installing the Multimedia Tap on a Pedestal	2-11
Mounting the Faceplate	2-14
Installing the Power Distribution Unit (PDU)	2-17
Installing the Coax PDU	2-18
Installing the Twisted Pair PDU	2-25

Tools Required

Before you start, make sure you have the following tools.

Tools	Used to. . .
Appropriate coaxial cable coring tool	Prepare feeder cable ends
3/8-in. hex wrench, or nut driver	Tighten strand clamp bolts and retainer bolts
1/2-in. or 3/8-in. wrench, or nut driver	Remove and replace cable end plugs
3/16-in. hex nut driver	Tighten seizure screws
Small flat-end screwdriver	Rotate seizure mechanism
Propane torch, or equivalent	Apply heat shrink
Wire cutters	Cut cable/center conductor
Sharp knife	Trim
Torque wrench in in-lb (0 in-lb to 250 in-lb minimum) (0 Nm to 28.2 Nm minimum)	Tighten seizure screws, connectors, and retainer bolts
7/16-in. wrench	Tighten house drop F-connector
15/16-in., 1-in., and 1 1/8-in. wrenches	Tighten connectors for feeder cable **Note:** Sizes may vary depending on manufacturer and connector style.
High-quality, small cable tie, 0.150 in. (3.8 mm) or less (twisted pair PDU only)	Secure the twisted-pair sheath to the bottom of the PDU
Grounding wire assembly, part number 569533 (hot install only)	To prevent electric shock and equipment damage. Certain components can deliver an electrical shock
Room temperature vulcanizing (RTV) silicone	To seal connections

Torque Specifications

The following are recommended torque specifications for the Multimedia Tap and PDU.

Part	Torque Specification
Strand clamp bolt	30 in-lb to 40 in-lb (3.4 Nm to 4.5 Nm)
KS-connector	Tighten according to manufacturer's recommended torque specification, typically 15 ft-lb to 25 ft-lb (20.3 Nm to 33.9 Nm), but not to exceed 60 ft-lb (81.3 Nm)
Port end plug	50 in-lb to 60 in-lb (5.6 Nm to 6.8 Nm)
Seizure screw	15 in-lb to 20 in-lb (1.7 Nm to 2.3 Nm)
Faceplate bolt	50 in-lb to 60 in-lb (5.6 Nm to 6.8 Nm)
F-connector (drop cable) RG–6 or RG–59	Tighten to manufacturer's recommended torque specification
PDU cover screw (for twisted pair version only)	50 in-lb to 60 in-lb (5.6 Nm to 6.8 Nm)

Torque Sequence

The following diagrams show the proper torque sequence for closing the housing.

4-Way Multimedia Tap

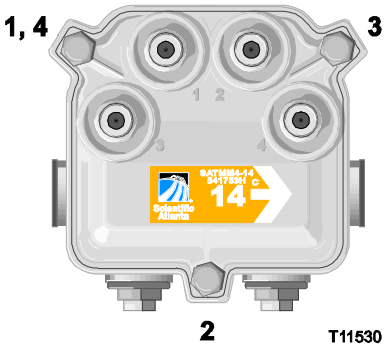

8-Way Multimedia Tap

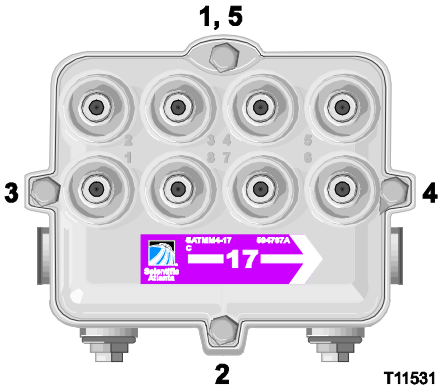

Preparing for Installation

Overview

Complete the following tasks before installing the tap housing.

- Prepare connectors
- Remove the faceplate

Important: The installer should review EN 50083-1/A2:1998 and install this product per EN 50083-1/A2:1998.

Preparing the Connectors

The Multimedia Tap requires KS-connectors for input and output connections. You must trim pins to the correct length before inserting them into the housing. To prepare the connector, follow the steps below.

> ⚠ **WARNING:**
>
> **Avoid electrical shock and damage to this product. If AC is present on the cable, care should be taken to avoid electrocution or short circuits when cutting the cable.**

1. Cut the cable to allow proper entry into the port while also allowing for expansion hoops in strand installations.
2. Prepare the cable ends per the cable manufacturer's recommended method.
3. Place the connector above the entry port so that it lines up with its installed position.

4.

> ⚠ **WARNING:**
>
> **Avoid electrical shock and damage to this product. If AC is present on the cable, care should be taken to avoid electrocution or short circuits when cutting the cable.**

If the pin extends past the stripline on the housing, use wire cutters to trim the pin flush to the stripline. See the diagram below for a visual guide.

Important: If the pin does not reach the stripline on the housing, inadequate electrical connection to the tap may occur, causing loss of signal to all downstream subscribers.

> ⚠ **CAUTION:**
>
> **Always ensure that the length of the center conductor pin is accurate. Excessive length could damage the connection beam housing and could cause performance problems in the unit.**

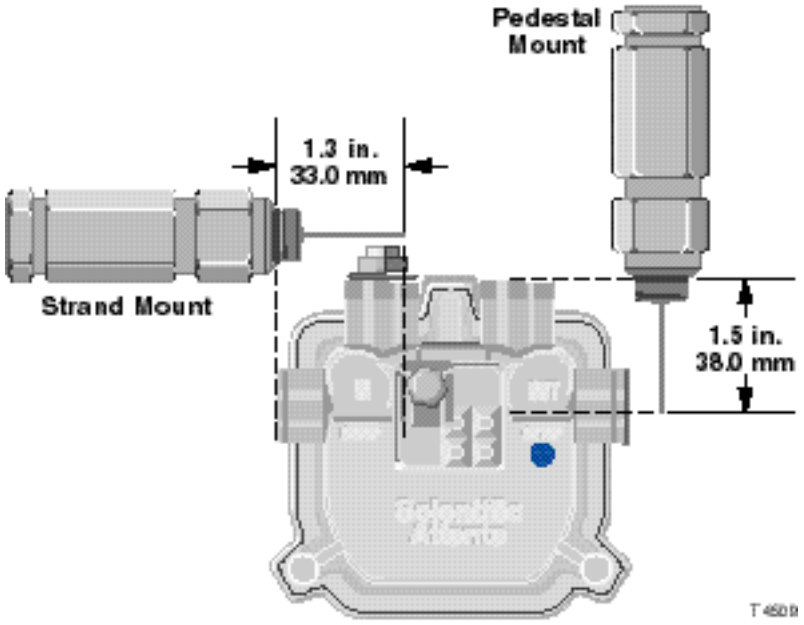

Removing the Faceplate

Overview

The complete Multimedia Tap assembly consists of a housing and a faceplate. The faceplate must be removed from the housing so the PDU can be attached to the tap housing.

> ⚠ **WARNING:**
>
> **Anytime the faceplate needs to be removed with the feeder cables connected, care must be taken to protect yourself from electrical shock and your equipment from damage. Certain components can deliver an electrical shock.**

If the faceplate needs to be removed with the feeder cables connected, refer to the procedure **Removing a Faceplate with Feeder Cables Connected (Hot Install)** later in this chapter.

Procedures for Removing the Faceplate

Follow these steps to remove the faceplate from the housing.

1. Using a 3/8-in wrench, loosen all faceplate bolts as shown in the 4-way tap diagram below.

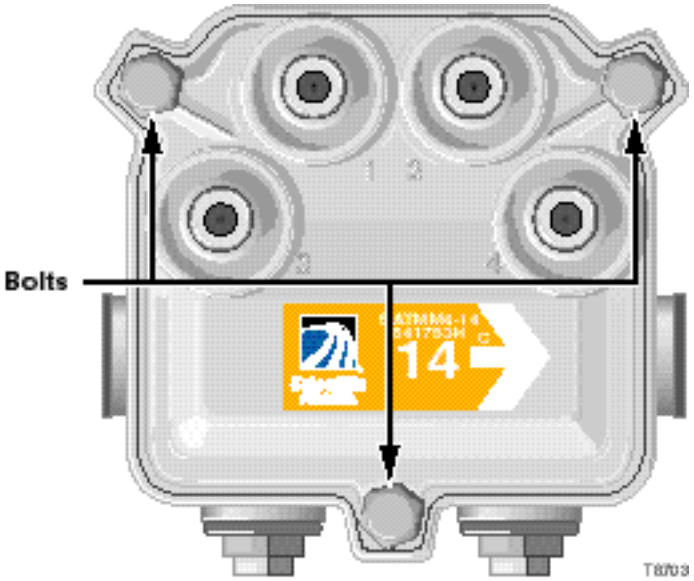

2. Pull the faceplate straight out from the housing. You need to use a small amount of force to pull the faceplate out.

> ⚠ **CAUTION:**
>
> **Care must be taken with the faceplate to avoid damage to the circuitry.**

3. Place the faceplate in a small box or on a block of foam to protect the tap circuitry. Set the faceplate in a secure place.
4. Proceed to **Installing the Tap on a Strand** or **Installing the Tap on a Pedestal.**

Removing a Faceplate with Feeder Cables Connected (Hot Install)

Follow these steps to remove a faceplate with feeder cables already connected to the housing.

1. Remove all coax drop cables from the drop port F-connectors.
2. Using a 3/8-in. wrench, loosen all faceplate bolts.
3.
   - If the housing is installed on a strand, go to step 4.
   - If the housing is installed on a pedestal, go to step 5.

> ⚠ **WARNING:**
>
> **Protect yourself from electric shock and your equipment from damage. Certain components can deliver an electrical shock.**

4. Attach a grounding wire assembly to the strand wire and a drop port F-connector.

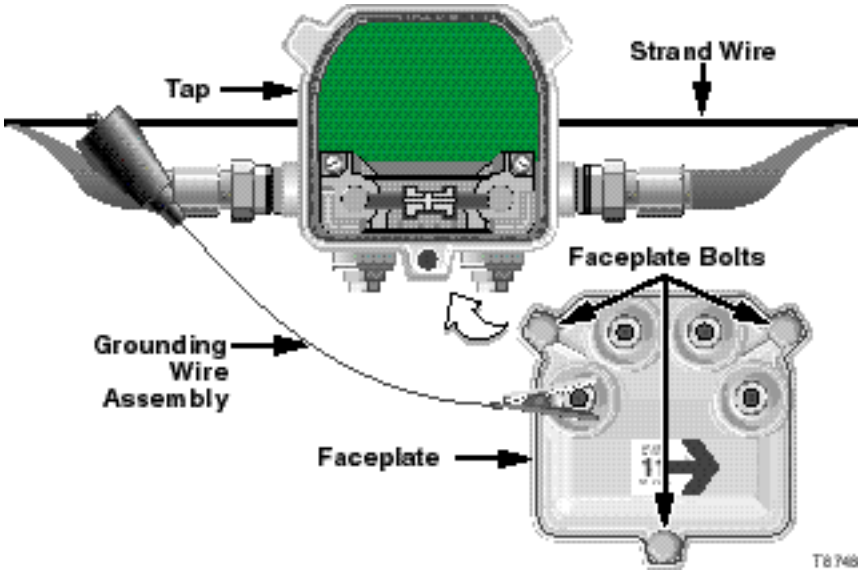

Proceed to step 6.

5. Attach a grounding wire assembly to the strand clamp bolt on the pedestal and a drop port F-connector.

   Front View:

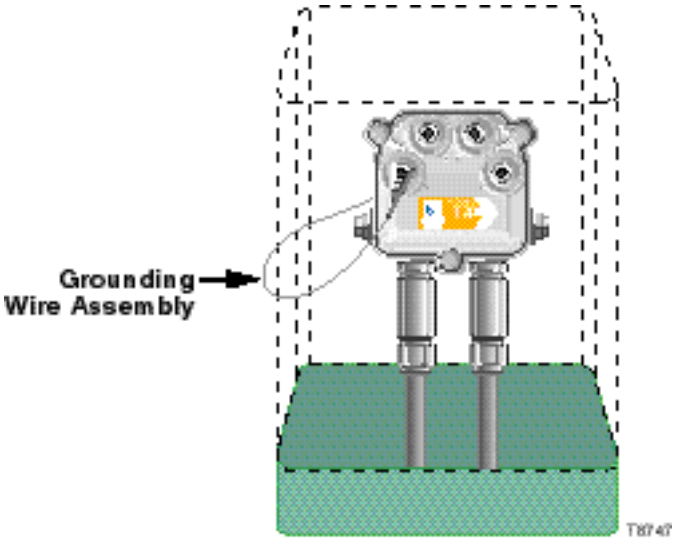

   Back View:

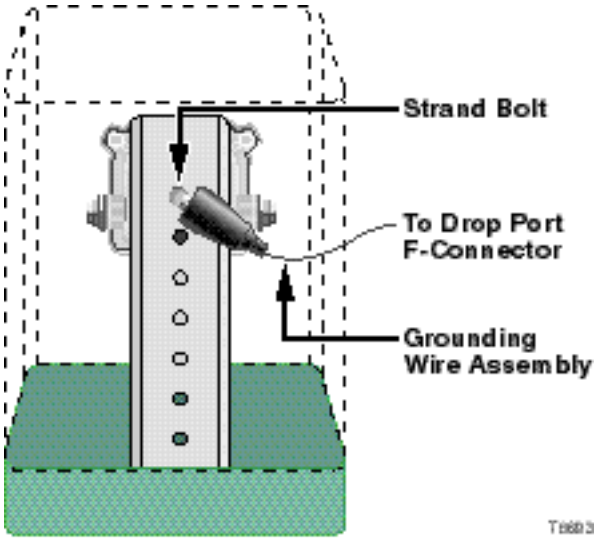

   Proceed to step 6.

6. Pull the faceplate straight out from the housing.

Installing the Multimedia Tap Housing on a Strand

Overview

The strand-mounted configuration has the feeder cable entering one side of the unit and exiting the other side. The unit has one strand clamp with a strand clamp bolt and uses a standard cable strand for mounting.

Installing the Tap Housing on a Strand

Follow these steps to install a Multimedia Tap housing on a strand.

1. Begin this procedure with the faceplate removed. See **Removing the Faceplate** earlier in this chapter.
2. Using a 3/8-in. wrench, loosen the strand clamp bolt.
3. Attach the housing to the strand making sure that the strand enters the strand clamp.

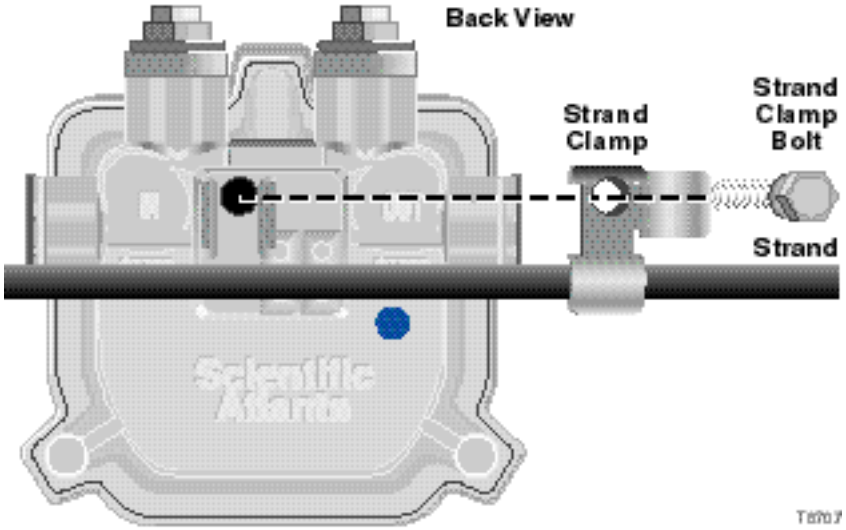

4. Secure the strand clamp to the strand by tightening the strand clamp bolt with a 3/8-in. wrench from 30 in-lb to 40 in-lb (3.4 Nm to 4.5 Nm).

5. Using a 3/16-in. hex-head driver or 3/16-in. straight blade screwdriver, loosen the two seizure screws inside the housing.

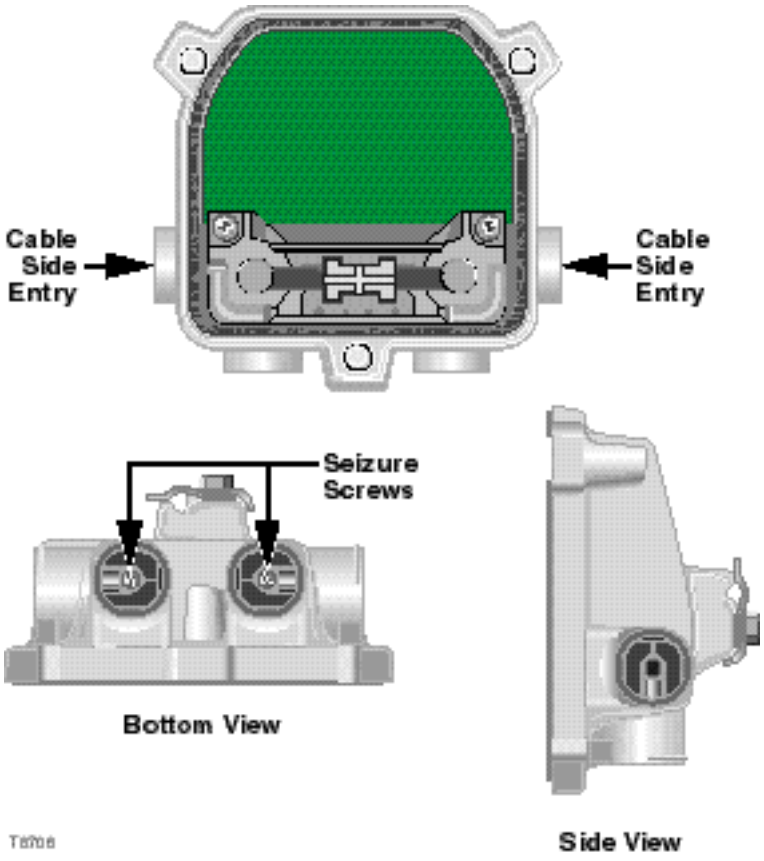

6. Thread the prepared KS-connectors into the housing at the cable side entry port locations as shown in the figure above. Make sure to tighten the connector according to the manufacturer's recommended torque specification, typically 15 ft-lb to 25 ft-lb (20.3 Nm to 33.9 Nm), but not to exceed 60 ft-lb (81.3 Nm).

7. Using a 3/16-in. hex-head driver or 3/16-in. straight blade screwdriver, tighten the two seizure screws from 15 in-lb to 20 in-lb (1.7 Nm to 2.3 Nm). See the diagram in step 5 for the location of the two seizure screws.

8. Replace the end plugs on the unused entry ports and torque with a 3/8-in. hex wrench from 50 in-lb to 60 in-lb (5.6 Nm to 6.8 Nm).

9. Attach the faceplate to the housing. See **Mounting the Faceplate** later in this chapter.

10. Attach the drop cable (RG-6 or RG-59) to the Multimedia Tap faceplate.

    Important: For any drop cables that will have AC power activated, be sure that the power blocking device(s) are installed on the drop at the home to prevent AC power from passing to subscriber televisions, set-top converters, or FM receivers. AC power must only be allowed to pass to the telephony equipment requiring it.

    Notes:

    - Provide strain relief for the coax drop cable per manufacturer's recommendation.
    - Be sure to terminate unused F-ports with 75 Ω terminators.

Installing the Multimedia Tap Housing on a Pedestal

Introduction

The pedestal-mounted configuration has the feeder cable entering and exiting the unit from the bottom. The Multimedia Tap without traps or filters fits in a 6-in. round or square pedestal. A larger pedestal is needed if traps or filters are installed.

Installing the Tap Housing on a Pedestal

Follow these steps to install a Multimedia Tap housing on a pedestal.

1. Begin this procedure with the faceplate removed. See **Removing the Faceplate** earlier in this chapter.
2. Using a 3/8-in. wrench, remove the strand bolt and strand clamp from the housing.
3. Mount the housing to the pedestal-mounting bracket using the strand bolt. Use the strand clamp as a spacer, if necessary.

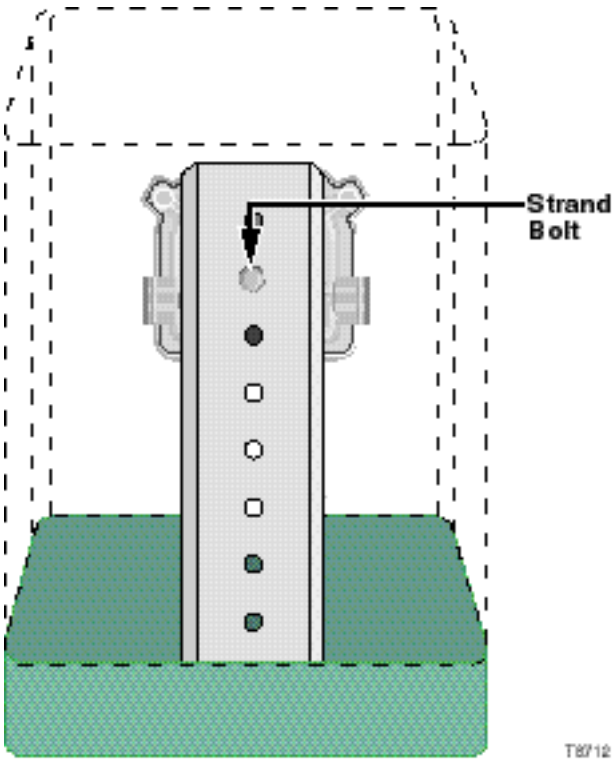

4. Using a 3/8-in. wrench, tighten the strand bolt from 30 in-lb to 40 in-lb (3.4 Nm to 4.5 Nm).

5. Using a 3/16-in. hex-head driver or 3/16-in. straight blade screwdriver, loosen the two seizure screws inside the housing.

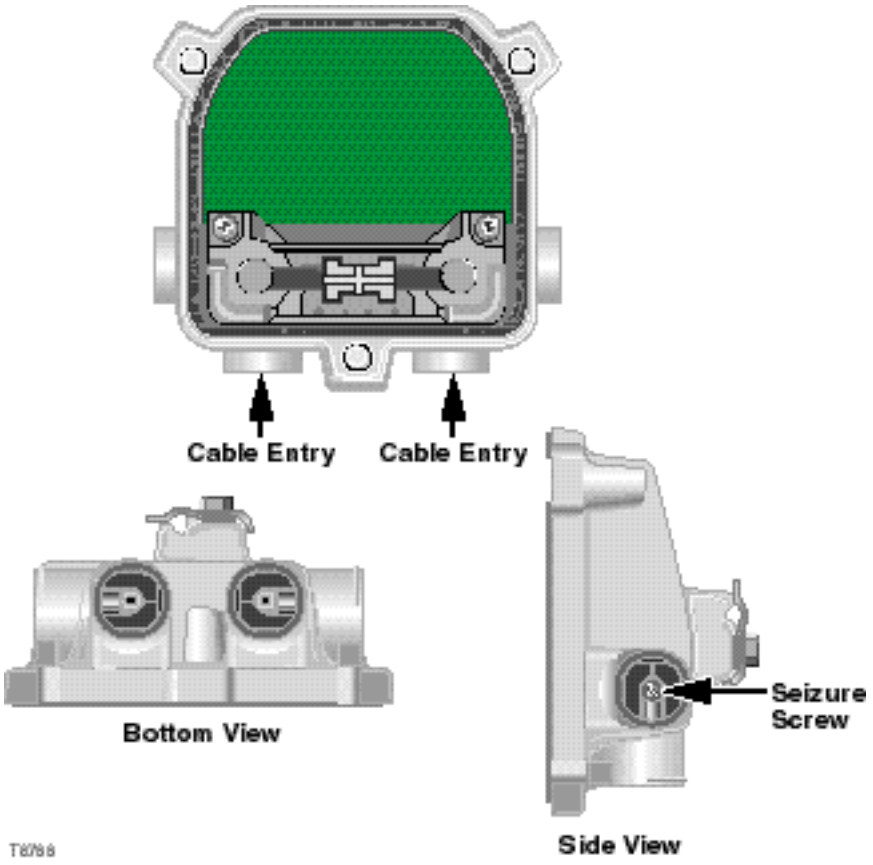

6. Thread the prepared KS-connectors into the housing at the cable entry port locations as shown in the figure above. Make sure to tighten the connector according to the manufacturer's recommended torque specification, typically 15 ft-lb to 25 ft-lb (20.3 Nm to 33.9 Nm), but not to exceed 60 ft-lb (81.3 Nm).

7. Using a 3/16-in. hex-head driver or 3/16-in. straight blade screwdriver, tighten the two seizure screws from 15 in-lb to 20 in-lb (1.7 Nm to 2.3 Nm). See the diagram in step 5 for the location of the seizure screws.

8. Replace the end plugs on the unused entry ports and torque with a 3/8-in. hex wrench from 50 in-lb to 60 in-lb (5.6 Nm to 6.8 Nm).

9. Attach the faceplate to the housing. See **Mounting the Faceplate** later in this chapter.

10. Attach the drop cable (RG-6 or RG-59) to the **Multimedia Tap faceplate.**

    Important: For any drop cables that will have AC power activated, be sure that the power blocking device(s) are installed on the drop at the home to prevent AC power from passing to subscriber televisions, set-top converters, or FM receivers. AC power must only be allowed to pass to the telephony equipment requiring it.

    Notes:

    - Provide strain relief for the coax drop cable per manufacturer's recommendation.
    - Be sure to terminate unused F-ports with 75 Ω terminators.

Mounting the Faceplate

Overview

After mounting the housing and connecting the feeder cables, you are ready to install the faceplate in the tap housing.

Mounting the Faceplate Procedure

Follow these steps to attach the faceplate to the housing.

1.
   - If the housing is installed on a strand, go to step 2.
   - If the housing is installed on a pedestal, go to step 3.

> ⚠ **WARNING:**
>
> **Protect yourself from electric shock and your equipment from damage. Certain components can deliver an electrical shock.**

2. Attach a grounding wire assembly to the strand wire and a drop port F-connector.

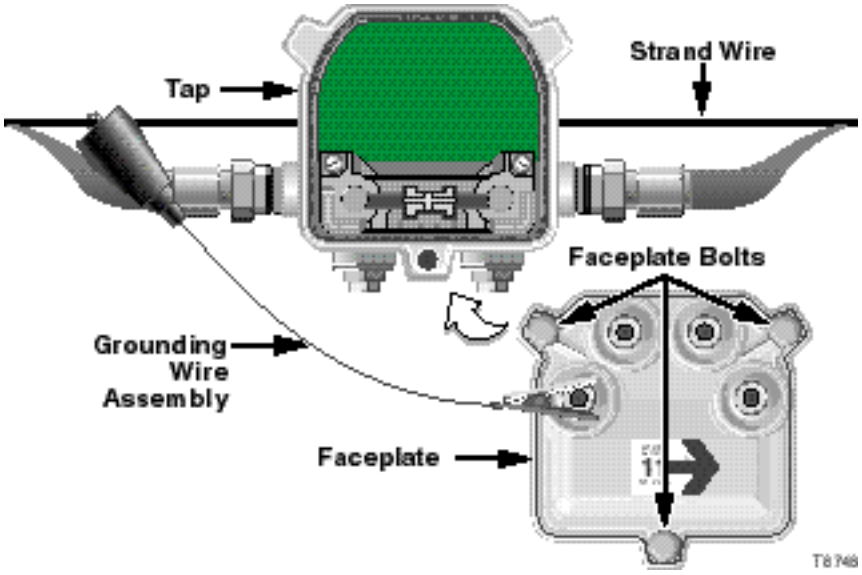

Proceed to step 4.

3. Attach a grounding wire assembly to the strand clamp bolt on the pedestal and a drop port F-connector.

   Front View:

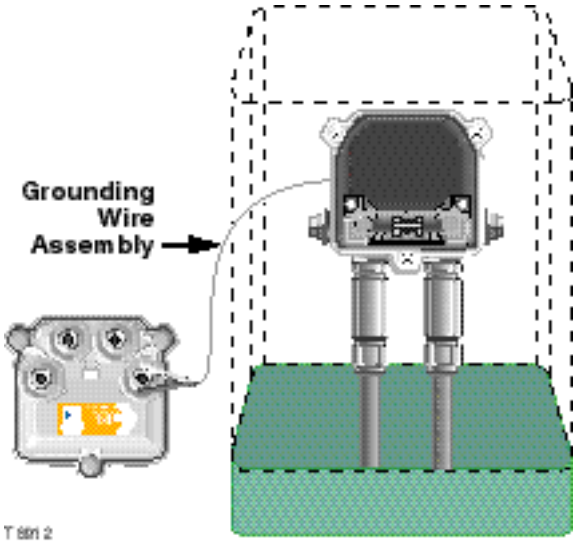

   Back View:

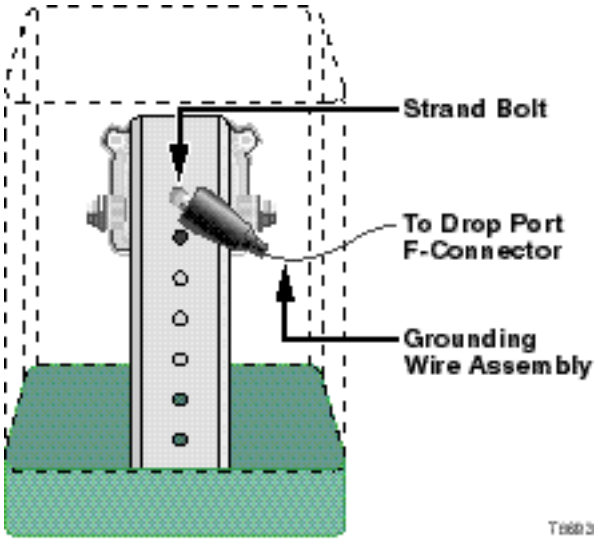

   Proceed to step 4.

4. Inspect the housing gasket and all mating surfaces. Wipe off any dirt, moisture, or debris.
5. Place the faceplate on the tap housing. Push firmly on the faceplate to seat it in the housing.
6. Remove the grounding wire assembly.

7. Using a 3/8 in. wrench, tighten the faceplate bolts from 50 in-lb to 60 in-lb (5.6 Nm to 6.8 Nm).

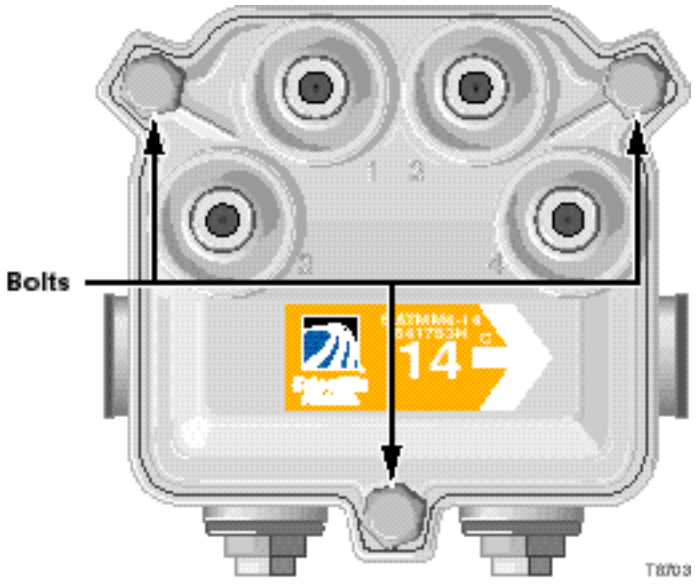

Strand Mounting Configuration

The Multimedia Tap with a Power Distribution Unit (PDU) can be mounted in a strand (aerial) position. See the following diagrams for strand mounting configuration.

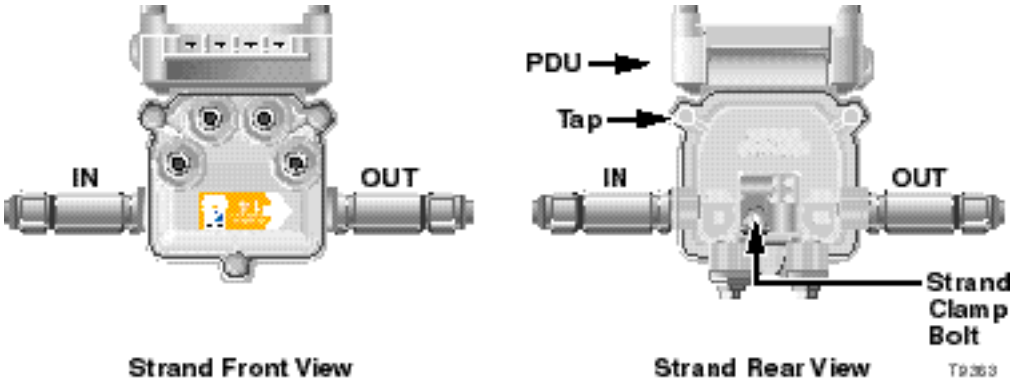

Pedestal Mounting Configuration

The Multimedia Tap with a Power Distribution Unit (PDU) can be mounted on a pedestal. See the following diagram of a Multimedia Tap with a PDU for the recommended pedestal-mounting configuration.

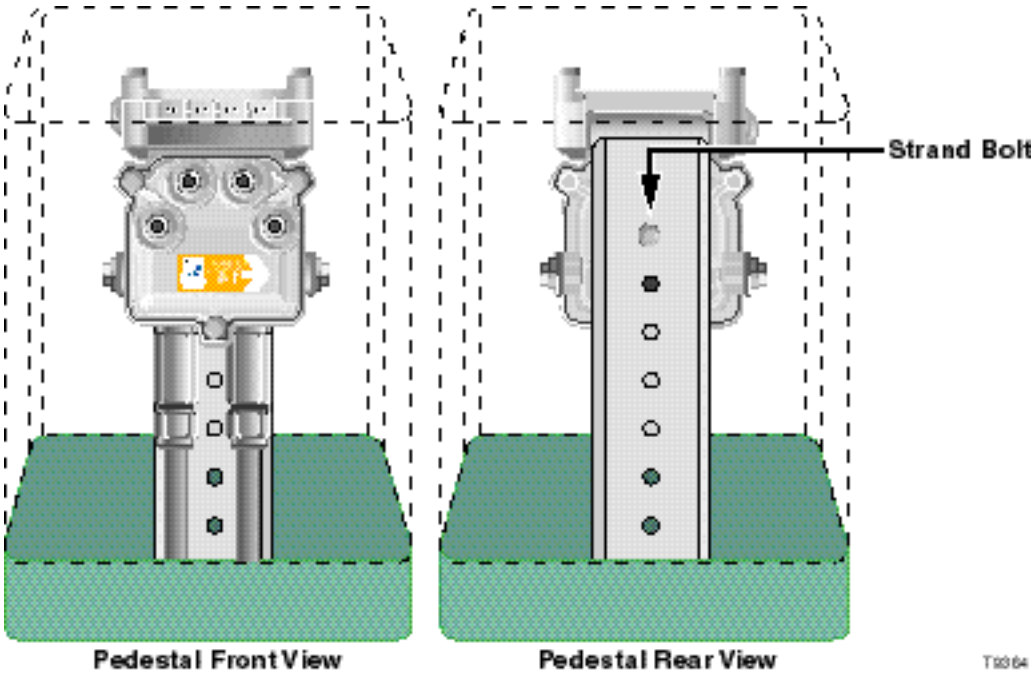

Coax PDU Installation Procedure

Follow the steps below to install the Coax PDU.

1. Ensure that the PDU AC power switches are in the "off" position. If the PDU is "on", use a flat-bladed screwdriver to turn the switch off. Refer to the illustration below for location of the "on" and "off" positions of the AC power switches in the 8-way PDU.

   Important: It is important to perform this step now in order to prevent unwanted AC power transmission on a subscriber drop during installation.

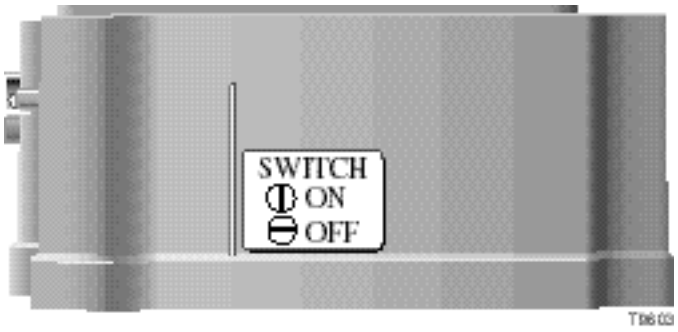

2. Using a 3/8 in. wrench, remove the faceplate from the existing tap by loosening the 3/8-in. faceplate bolts. Refer to **Removing the Faceplate** earlier in this chapter.

3. Remove the longer faceplate bolts attached to the plastic protective cover of the PDU. Replace the shorter bolts removed from the faceplate with the existing faceplate bolts.

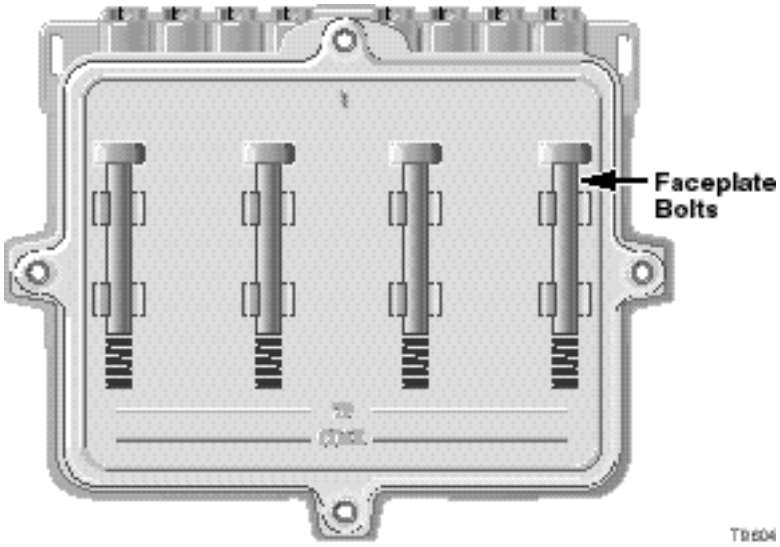

4. Remove the plastic protective cover from the Multimedia Tap faceplate.

> ⚠ **CAUTION:**
> **Be careful not to disturb or damage electrical components.**

5. Remove the plastic protective cover from the Coax PDU.

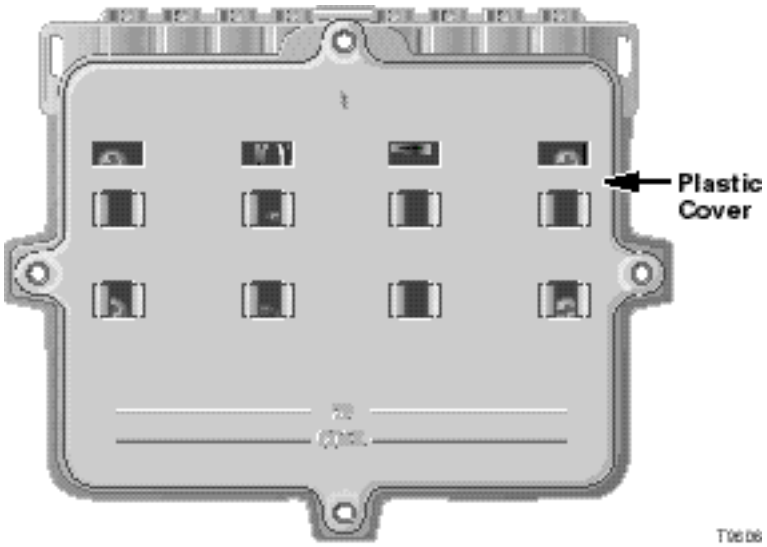

6. Proceed to **Installing the Coax PDU on a Strand-Mounted Tap** or **Installing the Coax PDU on a Pedestal-Mounted Tap** to complete your installation.

Installing the Coax PDU on a Strand-Mounted Tap

To install the Coax PDU on a strand-mounted tap, follow these steps.

1. **⚠ WARNING:**

   Protect yourself from electric shock and your equipment from damage! Certain components can deliver an electrical shock during hot installation.

   Attach the grounding wire assembly to the strand wire and the nearest PDU bolt clearance hole. Refer to the following diagrams in this step for the location of the grounding wire assembly.

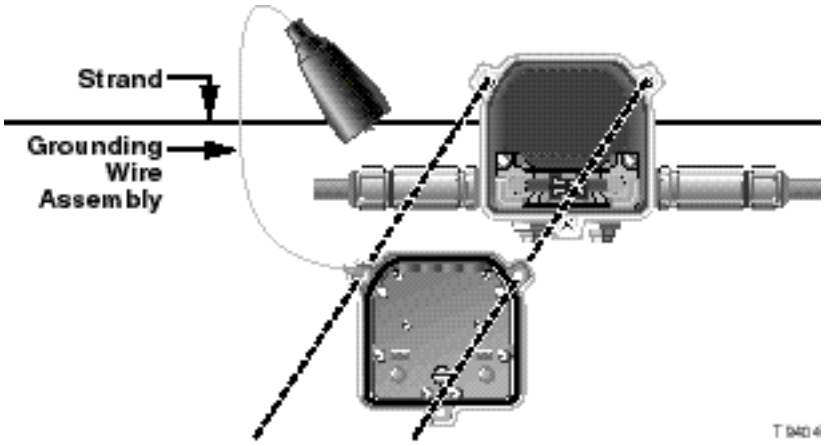

2. Press the PDU onto the back housing of the tap. Refer to the illustration in step 3.

3. Remove the grounding wire assembly from the PDU bolt clearance hole and attach this end to the faceplate drop port F-connector.

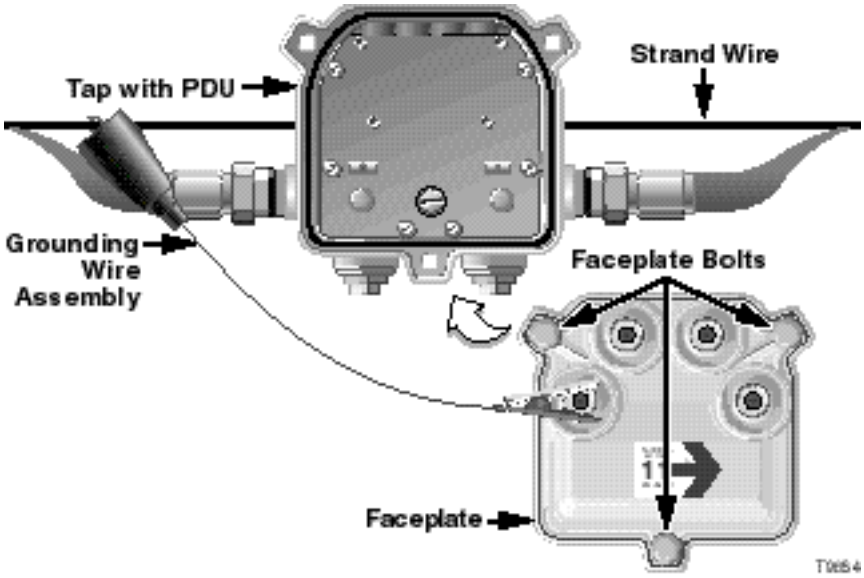

4. Proceed to **Attaching the Tap Faceplate to the Housing.**

Installing the Coax PDU on a Pedestal-Mounted Tap

To install the Coax PDU on a pedestal-mounted tap, follow these steps.

1. **⚠ WARNING:**

   Protect yourself from electric shock and your equipment from damage! Certain components can deliver an electrical shock during hot installation.

   Attach the grounding wire assembly to the strand clamp bolt and the nearest PDU bolt clearance hole. Refer to the following diagrams.

   Front view:

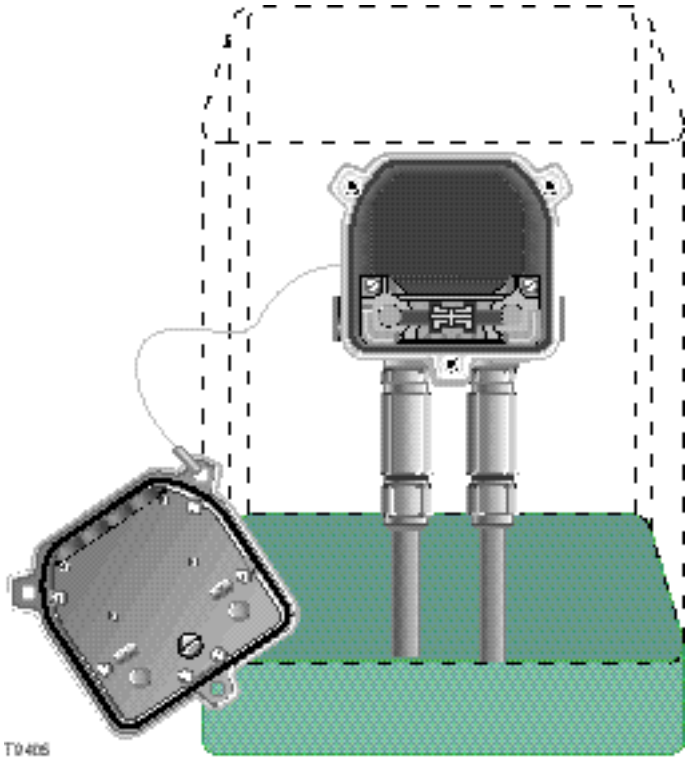

1. cont. Back View:

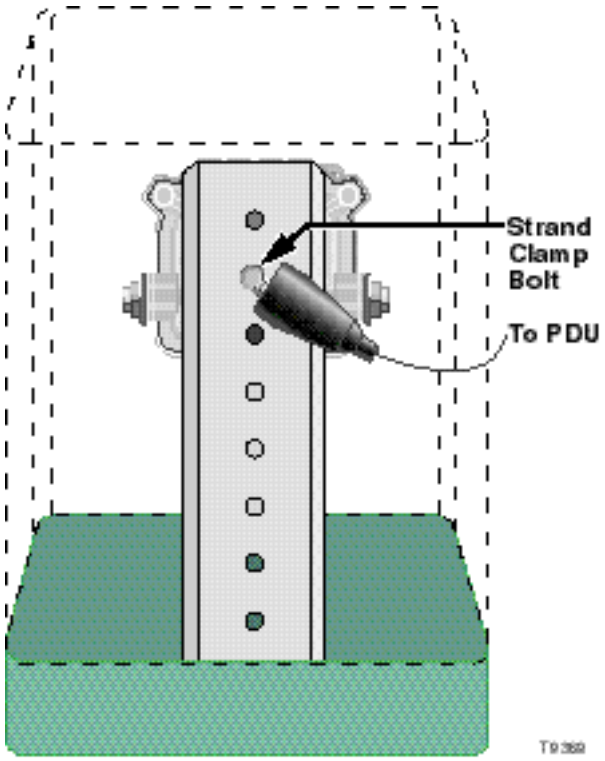

2. Press the PDU onto the back housing of the tap.

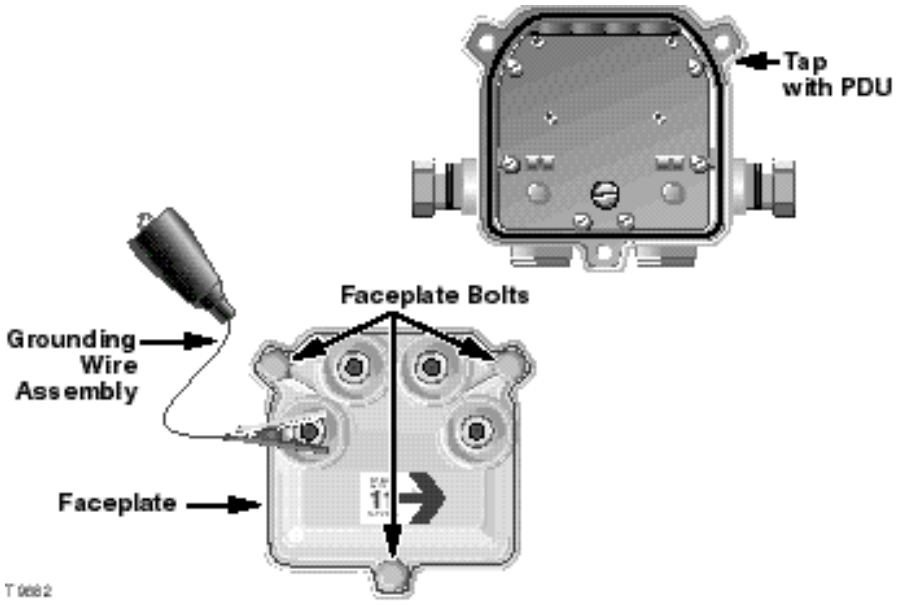

3. Remove the grounding wire assembly from the PDU bolt clearance hole and attach this end to the faceplate drop port F- connector.
4. Proceed to **Attaching the Tap Faceplate to the Housing.**

Attaching the Faceplate to the Housing

To install the faceplate to the housing, follow these steps.

1. Carefully install the tap faceplate to the front of the PDU. Using the longer faceplate bolts, tighten the 3/8-in. faceplate bolts from 50 in-lb to 60 in-lb (5.6 Nm to 6.8 Nm).
2. Remove the grounding wire assembly.
3. ⚠ **WARNING:**

   Please use extreme caution when turning the switch "on" and "off" to prevent unwanted AC power transmission on a subscriber drop.

   On the desired port, turn the switch from the "off" to "on" position using a flat-bladed screwdriver. The switches are marked with the port numbers.

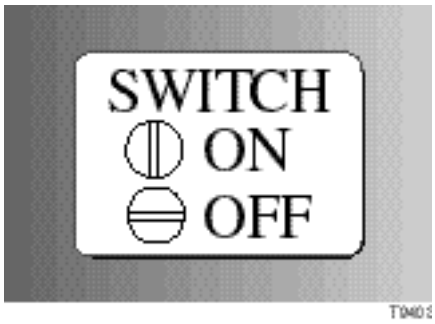

Twisted Pair PDU Installation Procedure

Follow the steps below to install the Twisted Pair PDU.

Note: Several manufacturers make coextruded cable with coax, twisted pair, and messenger wire in one common jacket. It is necessary to use this type of wire for proper strand (aerial) installation. For underground installations, it is acceptable to use cable without the messenger wire.

Important: If you are installing the twisted pair version without PTCs' installed, do not insert the PTC's before you begin your installation procedures. This will result in AC power transmission on the subscriber drop during installation.

1. Remove the faceplate from an existing tap by loosening the 3/8-in. faceplate bolts. Refer to **Removing the Faceplate** earlier in this chapter.
2. Remove the longer faceplate bolts attached to the plastic protective cover of the PDU. Replace the shorter bolts removed from the faceplate with these faceplate bolts.

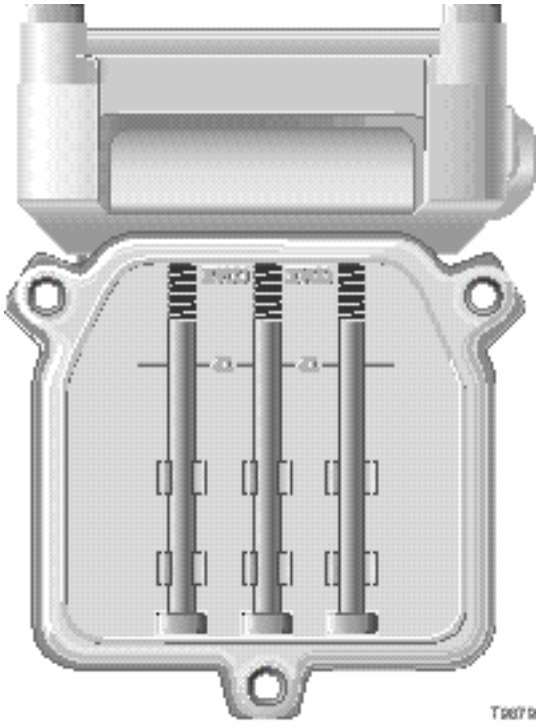

4. Remove the plastic protective cover from the Multimedia Tap faceplate.



> ⚠ **CAUTION:**
> **Be careful not to disturb or damage electrical components.**

5. Remove the plastic protective cover from the Twisted Pair PDU.
6. Proceed to **Installing the Twisted Pair PDU on a Strand-Mounted Tap** or **Installing the Twisted Pair PDU on a Pedestal-Mounted Tap** to complete your installation.

Installing the Twisted Pair PDU on a Strand-Mounted Tap

To install the Twisted Pair PDU on a strand-mounted tap, follow these steps.

1. ⚠ **WARNING:**

   Protect yourself from electric shock and your equipment from damage! Certain components can deliver an electrical shock during hot installation.

   Attach the grounding wire assembly to the strand wire and the nearest PDU access cover bolt. Refer to the following diagrams in this step for the location of the grounding wire assembly.

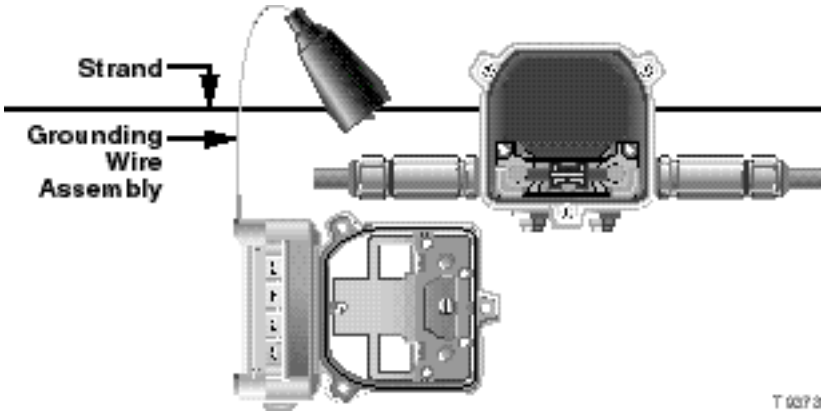

2. Push the Twisted Pair PDU onto the back housing of the tap. Refer to the illustration in step 3.

3. Remove the grounding wire assembly from the PDU access cover bolt and attach this end to the faceplate drop port F-connector.

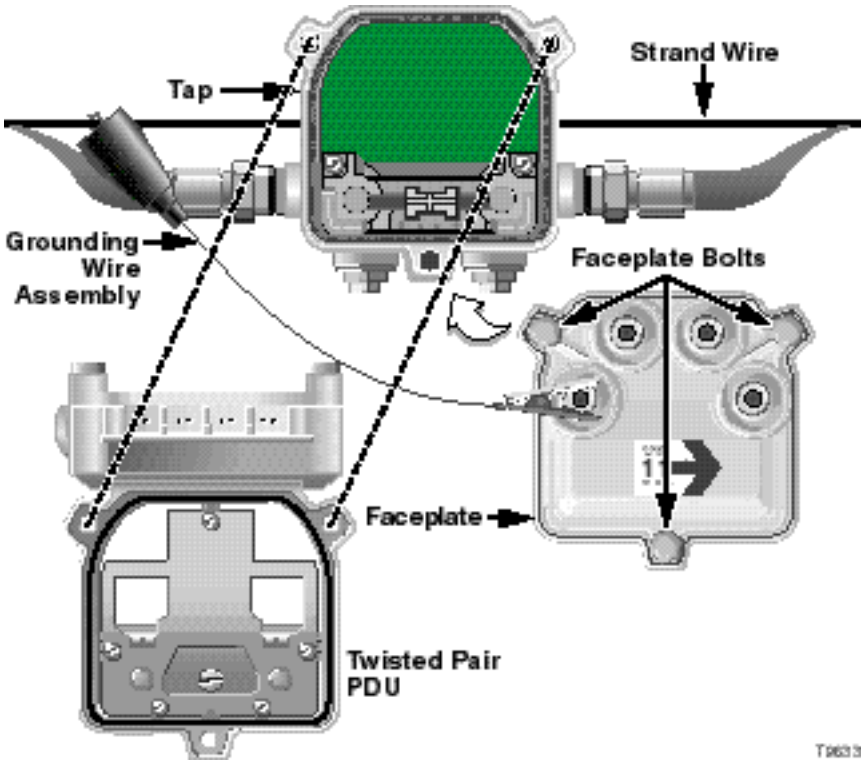

4. Proceed to **Attaching the Tap Faceplate to the Housing.**

Installing the Twisted Pair PDU on a Pedestal-Mounted Tap

To install the Twisted Pair PDU on a pedestal-mounted tap, follow these steps.

1. ⚠ **WARNING:**

   Protect yourself from electric shock and your equipment from damage! Certain components can deliver an electrical shock during hot installation.

   Attach the grounding wire assembly to the strand clamp bolt and the nearest PDU access cover bolt. Refer to the following diagrams.

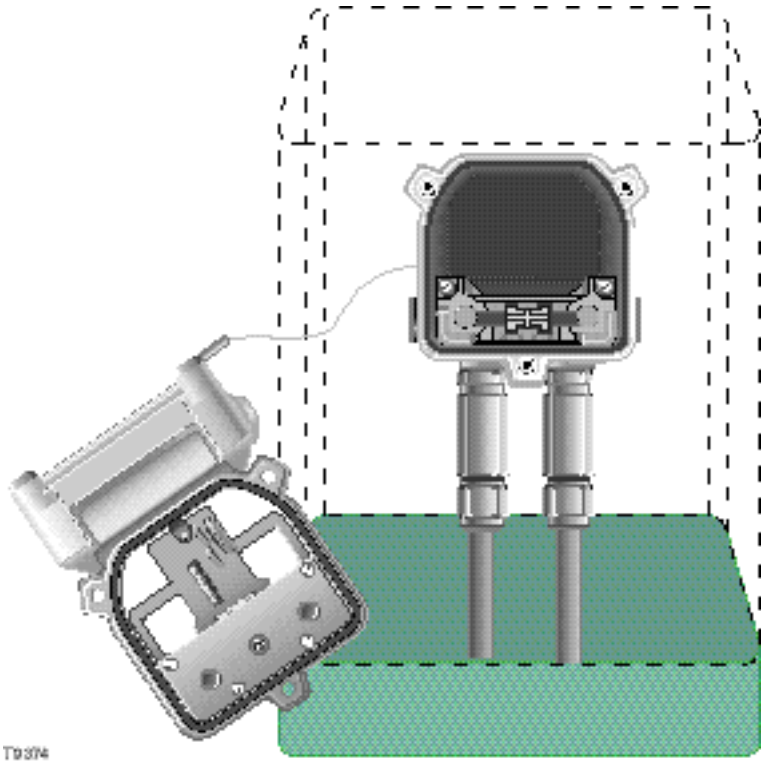

1. Back View:

Cont.

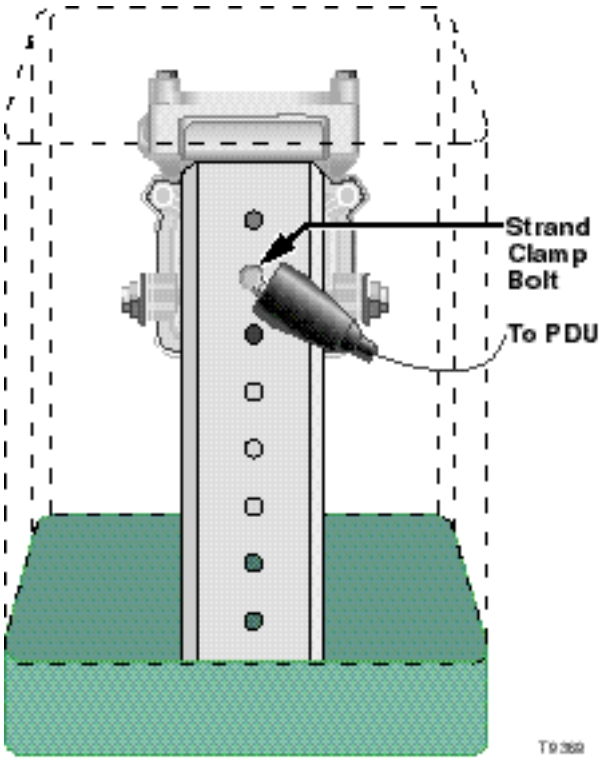

2. Push the Twisted Pair PDU onto the back housing of the tap. Refer to the illustration in step 3.

3. Remove the grounding wire assembly from the PDU access cover bolts and attach this end to the faceplate drop port F-connector.

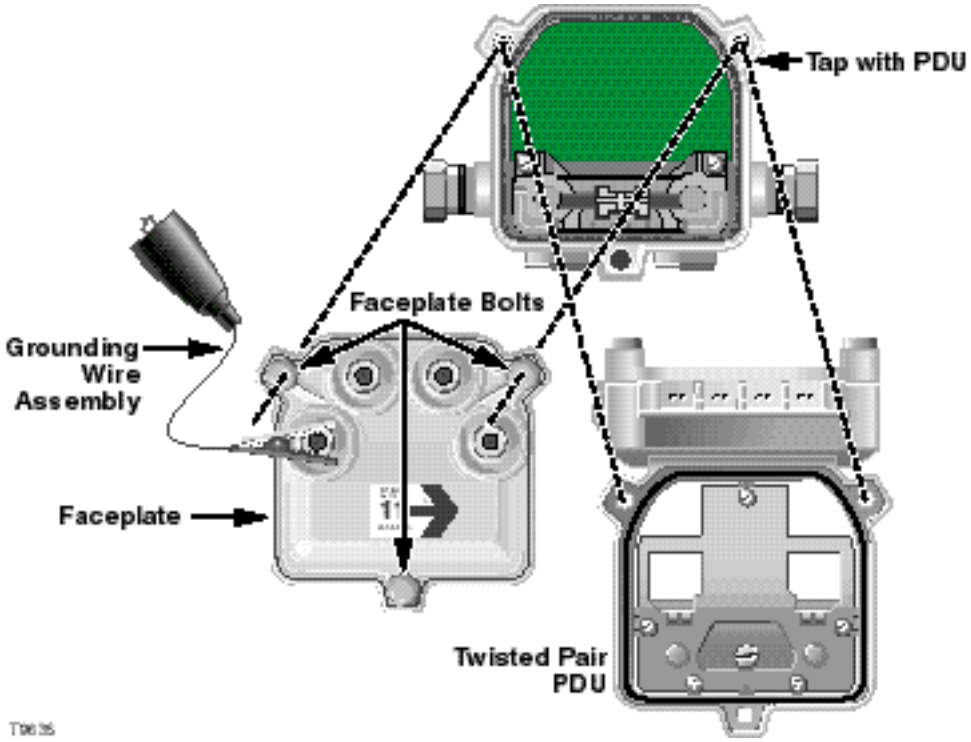

4. Proceed to **Attaching the Faceplate to the Housing**.

Attaching the Faceplate to the Housing

To attach the faceplate to the housing, follow these steps.

1. Carefully install the tap faceplate to the front of the PDU. Using the longer faceplate bolts, tighten the 3/8-in faceplate bolts from 50-in-lb to 60 in-lb (5.6 Nm to 6.8 Nm).
2. Remove the grounding wire assembly.

Attaching the Twisted Pair Cable

To attach the Twisted Pair cable, follow these steps.

1. Open the PDU access cover by loosening the 3/8-inch screws.
2. Carefully split the parallel wire to separate the twisted pair sheath from the coax sheath.

> ⚠ **CAUTION:**
>
> **A twisted pair power installation requires the cable be prepared to properly mate with the twisted pair connectors.**

- You must use a utility knife or similar tool to cut the web close to the twisted pair sheath without nicking the outer cover of the twisted pair or the coax.
- Cut back the web a distance of 16 in. to 18 in. (40.6 cm to 45.7 cm), or whatever is appropriate for your installation, so that the coax can gently bend to connect to the drop F-ports and the twisted pair can enter at the bottom of the PDU.
- Ensure that the twisted pair sheath is prepared so that the outside of the sheath is circular as shown in the following diagram (with any burred edges removed).

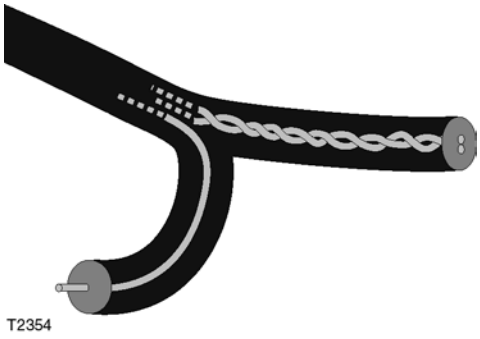

3. Cut off approximately 2 inches (5.1cm) of the outer sheath so that the two twisted pair wires are exposed.

   Note: The Twisted Pair PDU uses IDC connectors and does not require insulation to be removed.



4. **⚠ WARNING:**

   If installing the Twisted Pair PDU with PTC's installed (part numbers 750595 and 750596), avoid electrical shock. AC power is present on the IDC's during installation.

   ⚠ CAUTION:

   If installing the Twisted Pair PDU with PTC's installed (part numbers 750595 and 750596), please use extreme caution when inserting the IDC's, to prevent unwanted AC power transmission on the Twisted Pair.

   Lift the desired connector into the open position.

5. Simultaneously, push the ends of the two twisted pair wires through the small holes and into the respective hot and ground connectors.

   Note: The connector is labeled HOT and GND.

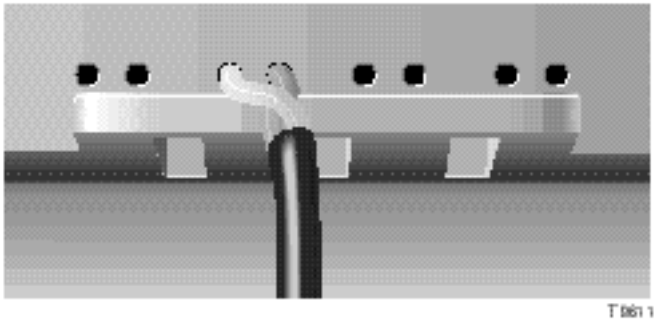

6. Press down on the IDC connector until it is fully seated.

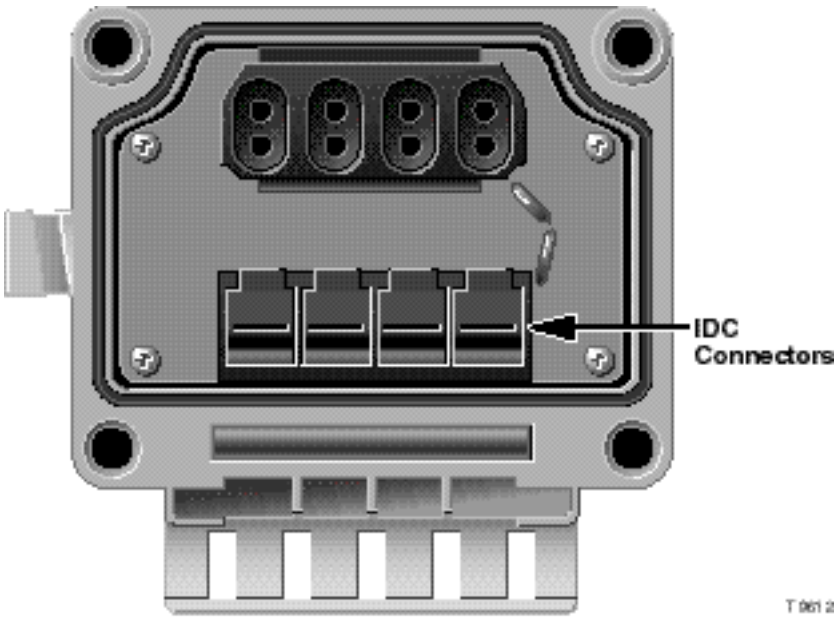

7. Continue with additional twisted pair connections if necessary.

8. Using a small cable tie, secure the twisted-pair sheath to the bottom of the PDU.

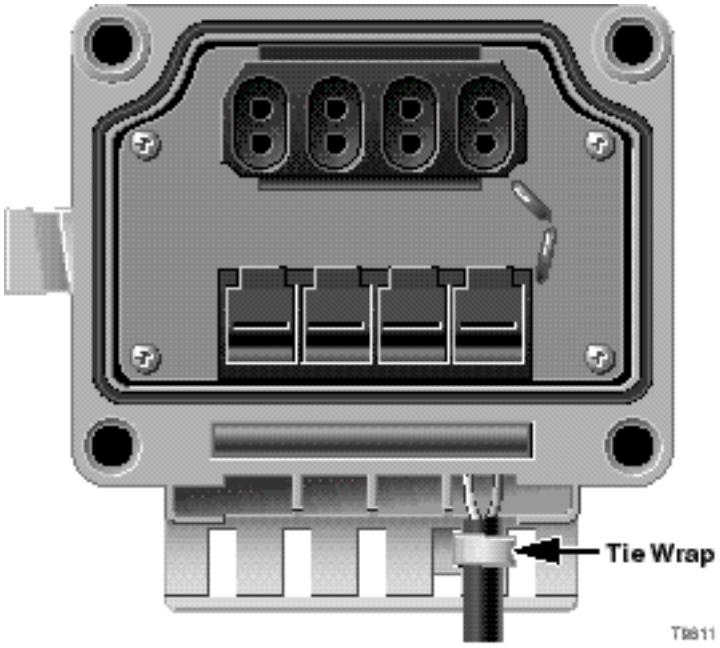

⚠CAUTION:

Be sure to use a high-quality cable tie that is resistant to ultraviolet light, chemicals, temperature extremes, and is flame resistant.

Note: The width of the cable tie must be 0.150 in. (3.8 mm) or less. Suggested cable tie materials are listed, in descending preference, as follows:

- Stainless steel
- Halar (fluorocarbon - ECTFE)
- Tefzel (fluorocarbon - ETFE)
- High-density polyethylene
- Weather resistant polypropylene

9.
- If installing PTC's, proceed to step 10.
- If PTC's are already installed (part numbers 750595 and 750596), proceed to step 12.

10.

> ⚠ **WARNING:**
>
> **Avoid electrical shock. AC power is present on the PTC during installation. Do not touch exposed metal on the PTC. Use the plastic covered PTC.**

> ⚠ **CAUTION:**
>
> **Please use extreme caution when inserting the PTC's, to prevent unwanted AC power transmission on the Twisted Pair.**

On the desired port, insert PTC, part number 592049, into the appropriate PTC guide slot as shown.

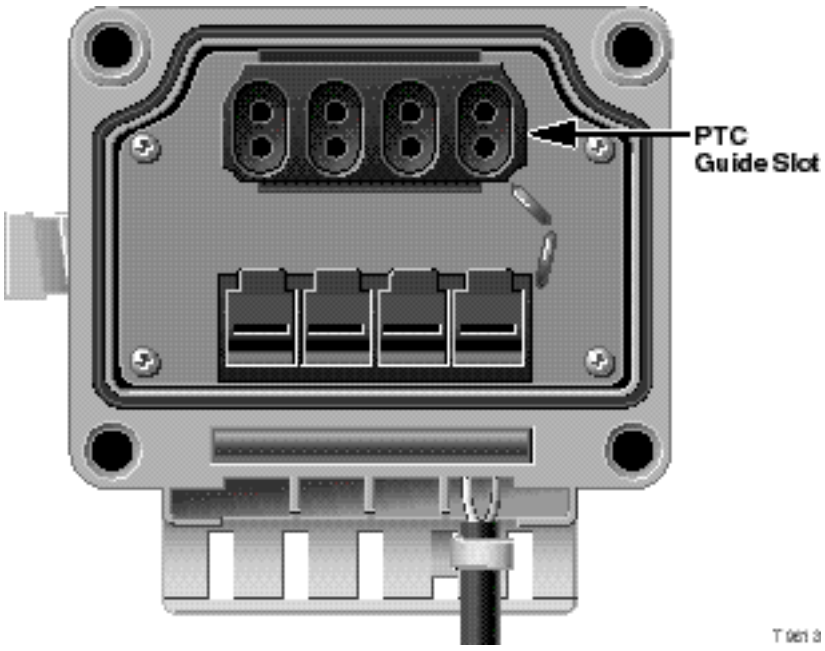

11. After the twisted pair wires are connected and PTC's are inserted, apply RTV to fill the compartment (area near the tie wrap) and seal the ends of the twisted pair jacket.

12. Close the PDU cover and torque the PDU cover screws from 50 in-lb to 60 in-lb (5.6 Nm to 6.8 Nm).

13. Attach the coax cable to the tap's drop F-ports as desired. Make sure to tighten according to the manufacturer's recommended torque specification.

    Note: Provide strain relief for the coax drop cable per manufacturer's recommendation.

    > ⚠ **CAUTION:**
    >
    > **Avoid damage to this product. Before installing any terminators on the faceplate, make sure AC is not present on the drop ports.**

14. Install 75 ohm terminators on all unused ports of the faceplate.

Chapter 3
Customer Information

Overview

Introduction

If you have technical questions, call Cisco Services for assistance. Follow the menu options to speak with a service engineer.

Access your company's extranet site to view or order additional technical publications. For accessing instructions, contact the representative who handles your account. Check your extranet site often as the information is updated frequently.

Appendix A
Technical Information

Overview

Introduction

Knowledge of product specifications and cable connectors can assist you in configuring the Multimedia Tap in your HFC network.

Scope of This Appendix

This appendix covers important technical aspects of the Multimedia Tap System.

In This Appendix

This appendix contains the following topics.

Topic	See Page
Specifications	A-2
Part Numbers	A-4

Specifications

Introduction

The following are the specifications for the Multimedia Tap System.

Notes:

- Specifications are subject to change without notice.
- Please refer to product data sheets for RF performance specifications.

Dimensions

The table below lists the specifications for the dimensions of the PDUs and all the Multimedia Taps.

Item	Specification
Multimedia Taps 2/4-way	3.6 in. H x 3.6 in. W x 3 in. D (91.44 mm H x 91.44 mm W x 76.2 mm D)
Multimedia Taps 8-way	4.25 in. H x 5.25 in. W x 3 in. D (107.95-mm H x 133.35 mm W x 76.2 mm D)
Twisted Pair PDU 4-way	5.2 in. H x 3.83 in. W x 3 in. D (132.1 mm H x 97.3 mm W x 76.2 mm D)
Twisted Pair PDU 8-way	5.93 in. H x 5.62 in. W x 3 in. D (150.6 mm H x 142.7 mm W x 76.2 mm D)
Coax PDU 4-way	3.7 in H x 3.8 in. W x 1.81 in. D (19.3 mm H x 97.8 mm W x 46 mm D)
Coax PDU 8-way	4.46 in. H x 5.64 in. W x 1.52 in. D (113.3 mm H x 143.3 mm W x 38.73 mm D)

Multimedia Taps Electrical

The table below lists the electrical specifications for the 2/4-way and 8-way Multimedia Tap Systems.

Item	Specification
Operational frequency bandwidth	5 MHz to 1000 MHz
Thru current rating	12 A, 60/90 V AC
Impedance	75 Ω
Interface	F-ports
Operating temperatures	-40°F to +140°F (-40°C to +60°C)

PDU Electrical

The table below lists the electrical specifications for the PDU.

Item	Specification
PDU thru current rating	12 A, 60/90 V AC
PDU current limiting	250 mA to 300 mA @ 60°C per drop
PDU surge resistance	1 kV
PDU twisted-pair connection	18 AWG to 24 AWG solid

Mechanical

The table below lists the mechanical specifications for the PDUs and all the Multimedia Taps.

Item	Specification
Multimedia Tap: 2/4-way and 8-way	• AL360T housing with powder coating for superior environmental protection • Sealed and swaged extended F-ports for maximum resistance to moisture ingress • Tin-plated brass F-ports to ensure a corrosion-resistant drop interface • Component covers for additional protection of faceplate circuitry during maintenance • Versatile housing design permits aerial, pedestal, or MDU mounting schemes • Operating temperature from -40°F to +140°F (-40°C to +60°C) • EMI shielding minimum -100 dB • Pressure test at 10 psi for 60 seconds under water
PDU	• AL360 housing with powder coating for superior environmental protection

Multimedia Taps

The table below lists the part numbers, model numbers, and descriptions of the Multimedia Tap Systems.

Part number	Model number	Description
541741	SAT MM 2-4	Multimedia 2-way @ 4 dB
541742	SAT MM 2-8	Multimedia 2-way @ 8 dB
541743	SAT MM 2-11	Multimedia 2-way @ 11 dB
541744	SAT MM 2-14	Multimedia 2-way @ 14 dB
541745	SAT MM 2-17	Multimedia 2-way @ 17 dB
541746	SAT MM 2-20	Multimedia 2-way @ 20 dB
541747	SAT MM 2-23	Multimedia 2-way @ 23 dB
541748	SAT MM 2-26	Multimedia 2-way @ 26 dB
541749	SAT MM 2-29	Multimedia 2-way @ 29 dB
541751	SAT MM 4-8	Multimedia 4-way @ 8 dB
541752	SAT MM 4-11	Multimedia 4-way @ 11 dB
541753	SAT MM 4-14	Multimedia 4-way @ 14 dB
541754	SAT MM 4-17	Multimedia 4-way @ 17 dB
541755	SAT MM 4-20	Multimedia 4-way @ 20 dB
541756	SAT MM 4-23	Multimedia 4-way @ 23 dB
541757	SAT MM 4-26	Multimedia 4-way @ 26 dB
541758	SAT MM 4-29	Multimedia 4-way @ 29 dB
541760	SAT MM 8-11	Multimedia 8-way @ 11 dB
541761	SAT MM 8-14	Multimedia 8-way @ 14 dB
541762	SAT MM 8-17	Multimedia 8-way @ 17 dB
541763	SAT MM 8-20	Multimedia 8-way @ 20 dB
541764	SAT MM 8-23	Multimedia 8-way @ 23 dB
541765	SAT MM 8-26	Multimedia 8-way @ 26 dB
541766	SAT MM 8-29	Multimedia 8-way @ 29 dB

PDUs

The table below lists the part numbers and descriptions of the PDUs.

Part number	Description
738447	2/4-way coaxial-drop powering
738448	8-way coaxial-drop powering
738445	2/4-way twisted-pair powering
738446	8-way twisted-pair powering
750595	2/4-way twisted-pair powering with PTC's installed
750596	8-way twisted-pair powering with PTC's installed
*592049	PTC Assemblies (1 bag of 100)

* PTC Assembly required for use with the Twisted Pair PDU (sold separately).

Glossary

A	Ampere (amp) is the unit for measuring electrical current.
AC	Alternating current
AC/RF bypass switch	Provides interruption-free service to downstream customers.
Addressable	The ability to control an individual unit in a system of many similar units.
Aerial mount	Installed equipment on an above ground strand.
Amplifier	An amplifier that supplies a transmission line or system with a signal at a stipulated level.
Analog channel	A channel that occupies a fixed location in a 6 MHz bandwidth within the 54 MHz to 550 MHz range of the RF band. Analog video channels deliver one traditional broadcast television channel in each 6 MHz band.
Assy.	Assembly
ASTM	American Society for Testing and Materials
Attenuation	A decrease in signal magnitude occurring in transmission from one point to another or in passing through a loss medium. Attenuation is generally expressed in decibels (dB).
Attenuator	Plug-in pad. It is a device designed to reduce signal strength by an amount specified in dB.
ATX	Addressable Transmitter
AUX	Auxiliary
AWG	American wire gauge
Bandwidth	A measure of the information-carrying capacity of a communication channel; range of usable frequencies that can be carried by a CATV system; corresponds to the difference between the lowest and highest frequency signal that can be carried by the channel.
Baud (Bd)	The number of times a state change occurs per second on a communications channel.
Bit	Short for Binary Digit. Can be either a "one" or a "zero".

BNC	A coaxial connector that uses a bayonet type attachment to secure the cable. It is also known as Baby "N" connector.
Broadband	Any communications system able to deliver multiple channels or services of video, voice, or data to its users or subscribers over a broadband of RF spectrum.
BW	Bandwidth
C/N, CNR	Carrier-to-Noise Ratio
CATV	Cable Television
dB	Decibel
dBc	Decibels of gain relative to a reference carrier
dBm	Decibels relative to 1 milliwatt
dBmV	Decibels relative to 1 millivolt
dBuV	Decibels relative to 1 microvolt
DC	Direct Current
DC	Directional Coupler module
DC/EQ	Directional Coupler/Equalizer
DC/RW	Directional Couple/Reverse Window
Decibel	A unit for expressing the relative intensity of sounds or other signals.
Diplex filter	A filter which divides the frequency spectrum into a high frequency segment and a low frequency segment so that two different signals can be sent down the same transmission path.
Directional coupler (DC) module	The directional coupler module determines the tap value of the unit. The DC value is selected for each installation to provide the proper RF level input. A tap with low loss from input to output and relatively low loss from input to take-off port, but relatively high loss from output to take-off port.
Distribution	The activities associated with the movement of material, usually finished products or service parts, from the manufacturer to the customer.

Drop amplifier	Provides amplification to a drop cable transmission line.
Drop cable	The cable assembly that connects a distribution tap to a user outlet.
Equalization	The process of compensating for an undesired result. For example, equalizing tilt in a distribution system.
Equalizer (EQ)	Controls the tile to the drop ports. It does not affect the feeder cable signal. An EQ value is selected for each installation to provide the specified output tilt.
FCC	Federal Communications Commission
F-connector	A screw-on type of connector used typically inside homes or on drop cabling.
Forward (downstream)	Signal direction from the headend to set-top terminal.
Frequency	The number of similar shapes in a unit of time. For example, the number of sine waves moving past a fixed point in a second.
Frequency Response	The effect that changing the frequency has on the magnitude of a signal.
FSK	Frequency-shift key
ft-lb	Foot-pound
GigaHertz (GHz)	A unit of frequency equal to one billion cycles per second.
GND	Ground
Headend	Control center of a cable Television system. The local switching or processing center for the cable network in a Hybrid fiber/coax network.
Hertz (Hz)	A unit of frequency equal to one cycle per second.
HFC	Hybrid fiber/coax
Hum modulation	An amplitude modulation distortion in the video signal caused by the AC signal being split from the RF signal in a device.
I/O	Input/output
IC	Integrated Circuit

IDC	Insulation displacement connector
IF	Intermediate frequency
Ingress	The process whereby unwanted signals enter the cable system to occupy spectrum that would otherwise remain free of signal energy.
in-lb	inch-pound
KB	KiloByte
LCD	Liquid crystal display
LED	Light emitting diode
LEQ/RC	Line Equalizer/Reverse Conditioner
MB	Megabyte
Mbps	Megabits per second
MDU	Multiple dwelling unit
Megahertz (MHz)	1 million Hertz
MMLEQ/RC	Multimedia Line Equalizer/Reverse Conditioner
MOV	Metal Oxide Varistor
Millivolt (mV)	1 thousandth of a volt
MTS	Multimedia Tap System
Nanosecond	1 thousandth of a microsecond
Nm	Newton meter
Passive	A device that routes AC and RF signals on the main feeder line of an HFC plant.
PCB	Printed circuit board
PDU	Power Distribution Unit
Pedestal mount	Installed equipment in an underground pedestal.
PTC	Positive temperature coefficient resistor

PWB	Printed Wiring Board
RC	Reverse Conditioner
Reverse/return/ upstream	Signal flow direction toward the headend.
RF	Radio frequency
RMA	Return Material Authorization
RX	Receive
SCTE	Society of Cable Television Engineers
Splitter	A device which divides power from an input to deliver multiple outputs or combines multiple inputs into one output.
SRC	Surge Resistant™ Circuitry
Tap	A device for diverting a small part of the signal flowing through a distribution network and sending it to a user. Typically, a device in a cable distribution line to provide signal to the customer.
Tilt	Spectral display slope caused by different attenuation of high frequencies and low frequencies through a medium.
Torque	The force applied to a bolt or screw to tighten the device.
TPM	Twisted Pair module
Trap	A passive device used to block a channel from being received by a cable TV subscriber.
TwP	Twisted pair (cables)
TX	Transmit
UL	Underwriter's Laboratories, a standards test and equipment approval group.
V	Volts
V AC	Volts Alternating Current
V DC	Volts Direct Current
W	Watts

2/4-way Multimedia Tap
housing, 1-4

4-way Multimedia Tap
faceplate, 1-5
with coax PDU, 1-6
with twisted pair PDU, 1-6

75 ohm terminator, 2-37

8-way Multimedia Tap
faceplate installed on housing, 1-5
housing, 1-4
with coax PDU, 1-7
with twisted pair PDU, 1-7

AC power switches, 2-18
attach
faceplate to housing, 2-14, 2-24, 2-31
twisted pair cable, 2-32

Bolt clearance hole, 2-20

Cable side entry, 2-12
cable tie materials, 2-35
cable tie wrap, 2-35
coax drop cable, 2-10, 2-13
coax power, 1-8
coextruded cable, 2-25
compliance, ix
current rating, A-2

Dimensions of the PDUs, A-2
drop cable, 2-10, 2-13
drop powering capability, 1-2

Electrical specifications
PDU current limiting, A-3
PDU surge resistance, A-3
PDU thru current rating, A-3
PDU twisted pair connection, A-3
end plugs, 2-9

Features
Multimedia Tap, 1-3
PDU, 1-8
front/back view of coax PDU, 1-9
front/back view of twisted pair PDU, 1-9

Grounding wire assembly, 2-20, 2-27, 2-29

Hot and ground connectors, 2-33
hot install, 2-6
housing gasket, 2-15

IDC connector, 2-33, 2-34
illustration Multimedia Tap System, 1-2
impedance, A-2
install
coax PDU on pedestal-mounted tap, 2-22
coax PDU on strand-mounted tap, 2-20
coax power PDU, 2-18

Multimedia Tap housing in pedestal, 2-11
Multimedia Tap housing on strand, 2-8
Multimedia Tap System, 2-1
twisted pair PDU, 2-25
twisted pair PDU on pedestal-mounted tap, 2-29
twisted pair PDU on strand-mounted tap, 2-27
Insulation Displacement Connector, 1-8
interface, A-2

KS-connectors, 2-3, 2-9, 2-12

Laser
modifications, ix

Model numbers, A-4
Multimedia Tap System diagram, 1-2

Obtain shipping address, 3-4
operating temperatures, A-2
operational frequency bandwidth, A-2

Packing return product, 3-8
parallel wire, 2-32
part numbers, A-4
Multimedia Tap Systems, A-4
PDU, A-5
PDU access cover bolt, 2-27
pedestal-mounting configuration with PDU, 2-17
plastic protective cover, 2-18
power, v
Power Distribution Unit, 1-8
preparing connectors, 2-3

Remove
faceplate, 2-5
faceplate with feeder cables already connected, 2-6
required tools, 2-1

Safety instructions, iv
seizure screws, 2-9
specifications
electrical, A-2
mechanical, A-3
Multimedia Tap System, A-2
strand bolt, 2-11
strand clamp, 2-8
strand clamp bolt, 2-8
strand mounting configuration with PDU, 2-17
stripline, 2-4
support phone numbers, 3-2
Surge Gap Tap, 1-8
Surge Gap™ Power Distribution Unit, 1-8
system overview, 1-2

Tasks before installing the tap housing, 2-3
tools, 2-1
torque specifications, 2-2
twisted pair power, 1-8
twisted pair sheath, 2-32
twisted pair wires, 2-33
types of PDUs, 1-8



Cisco Systems, Inc.
5030 Sugarloaf Parkway, Box 465447
Lawrenceville, GA 30042

678 277-1120
800 722-2009
www.cisco.com

This document includes various trademarks of Cisco Systems, Inc. Please see the Notices section of this document for a list of the Cisco Systems, Inc. trademarks used in this document.

Product and service availability are subject to change without notice.

© 2005, 2008, 2012 Cisco and/or its affiliates. All rights reserved.

Part Number 738920 Rev D

August 2012 Printed in USA