Install the Chassis

Note The images in this chapter are only for representation purposes, unless specified otherwise. The chassis' actual appearance and size may vary.

Rack Mount the Chassis

The chassis can be mounted on a 4-post or a 2-post rack based on the type of the chassis and the rack requirement.

- **4-Post Rack**-The following sections explain the mounting of the chassis on a 4-post rack:
  - Rack-Mount the Chassis in a 4-Post Rack — Procedure 1, on page 2- Contains the procedures for mounting the Cisco NCS-55A1-24H, Cisco NCS 5501, Cisco NCS 5501-SE, Cisco NCS-55A1-48Q6H, Cisco NCS-55A1-24Q6H-S, Cisco NCS-55A1-24Q6H-SS, Cisco NCS 55A1-36H-S, Cisco NCS 55A1-36H-SE-S, Cisco NCS 5502, and Cisco NCS 5502-SE chassis.

    To mount the Cisco NCS 55A2-MOD-S, Cisco 55A2-MOD-HD-S, Cisco NCS 55A2-MOD-SE-S, Cisco NCS-55A2-MOD-HX-S, and Cisco NC55A2-MOD-SE-H-S chassis on the front post of the 4-post rack, follow the steps in Rack Mount the Chassis in a 2 Post Rack — Procedure 2, on page 22.

  - Rack Mount the Chassis in a 4-Post Rack — Procedure 2, on page 10- Contains the procedures for mounting the Cisco NCS-55A2-MOD-HD-S, Cisco NCS-55A2-MOD-HX-S and Cisco NC55A2-MOD-SE-H-S chassis.

- **2-Post Rack**-The following sections explain the mounting of the chassis on a 2-post rack:

- Rack-Mount the Chassis in a 2-Post Rack — Procedure 1, on page 20- Contains procedures for mounting the Cisco NCS-55A1-24H, Cisco NCS 5501, Cisco NCS 5501-SE, Cisco NCS-55A1-24Q6H-S, and Cisco NCS-55A1-24Q6H-SS,
- Rack Mount the Chassis in a 2 Post Rack — Procedure 2, on page 22- Contains procedures for mounting the Cisco NCS-55A2-MOD-S, Cisco NCS-55A2-MOD-HD-S, Cisco NCS-55A2-MOD-SE-S, Cisco NCS-55A2-MOD-HX-S, and Cisco NC55A2-MOD-SE-H-S

Rack-Mount the Chassis in a 4-Post Rack — Procedure 1

This section describes how to use the rack-mount kit that is provided with the router to install the router in a 4-post rack.

Caution If the rack is on wheels, ensure that the brakes are engaged or that the rack is otherwise stabilized.

Note To mount the Cisco NCS 55A2-MOD-S, Cisco 55A2-MOD-HD-S, Cisco NCS 55A2-MOD-SE-S, Cisco NCS-55A2-MOD-HX-S, and Cisco NC55A2-MOD-SE-H-S chassis on the front post of the 4-post rack, follow the steps in Rack Mount the Chassis in a 2 Post Rack — Procedure 2, on page 22.

The following table lists the items that are contained in the rack-mount kit.

Table 1: Cisco NCS-55A1-24H, Cisco NCS 5501, Cisco NCS 5501-SE, Cisco NCS-55A1-48Q6H, Cisco NCS-55A1-24Q6H-S, Cisco NCS-55A1-24Q6H-SS Router Rack-Mount Kit

Quantity	Part Description
2	Rack-mount brackets
12	M4 x 6-mm Phillips flat-head screws
2	M5 x 12mm Phillips pan-head screws
2	Rack-mount guides
2	Rack-mount slider rails
1	Grounding lug

Table 2: Cisco NCS 55A1-36H-S and Cisco NCS 55A1-36H-SE-S Router Rack-Mount Kit

Quantity	Part Description
2	Rack-mount brackets
14	M4 x 6-mm Phillips flat-head screws
2	M4 x 6-mm Phillips pan-head screws

Quantity	Part Description
2	Rack-mount guides
2	Rack-mount slider rails
1	Grounding cover plate
1	Grounding lug

Table 3: Cisco NCS 5502 and Cisco NCS 5502-SE Router Rack-Mount Kit

Quantity	Part Description
2	Rack-mount brackets
18	M4 x 8-mm Phillips flat-head screws
2	M4 x 8mm Phillips pan-head screws
2	Rack-mount guides
2	Rack-mount slider rails
1	Grounding cover plate
1	Grounding lug

Step 1 Install the rack-mount brackets to the router as follows:

a) Determine which end of the chassis is to be located in the cold aisle as follows:

- If the router has port-side intake modules (fan modules with burgundy coloring), position the router so that the ports are in the cold aisle.
- If the router has port-side exhaust modules (fan modules with blue coloring), position the router so that the fan and power supply modules are in the cold aisle.

Note The Cisco NCS-55A1-24Q6H-SS module supports only port-side intake configuration.

b) Position a rack-mount bracket on the side of the chassis with its four holes that are aligned to four of the screw holes on the side of the chassis, and then use four M4 counter sink screws to attach the bracket to the chassis.

Note **Cisco NCS 55A1-36H-S, Cisco NCS 55A1-36H-SE-S, NCS 5502, NCS 5502 SE**: Remove the grounding cover label and align the grounding cover plate with the grounding holes in the chassis and attach the rack mount brackets.

Note You can align four of the holes in the rack-mount bracket to four of the screw holes on the front side of chassis or four of the screw holes on the rear side of the chassis. The holes that you use depend on which side your chassis need to be put in the cold aisle.

Note The following image shows the rack-mount brackets on the Cisco NCS 5501. The bracket installation is the same for the Cisco NCS 5501-SE, Cisco NCS-55A1-48Q6H, Cisco NCS-55A1-24Q6H-S, Cisco NCS-55A1-24Q6H-SS, and Cisco NCS 55A1-24H. However, Cisco NCS-55A1-48Q6H and Cisco NCS-55A1-24Q6H-S /Cisco NCS-55A1-24Q6H-SSdo not have a separate top plate; it is in-built in the system.

Figure 1: Rack-Mount Brackets on Cisco NCS 5501—Port-Side Intake

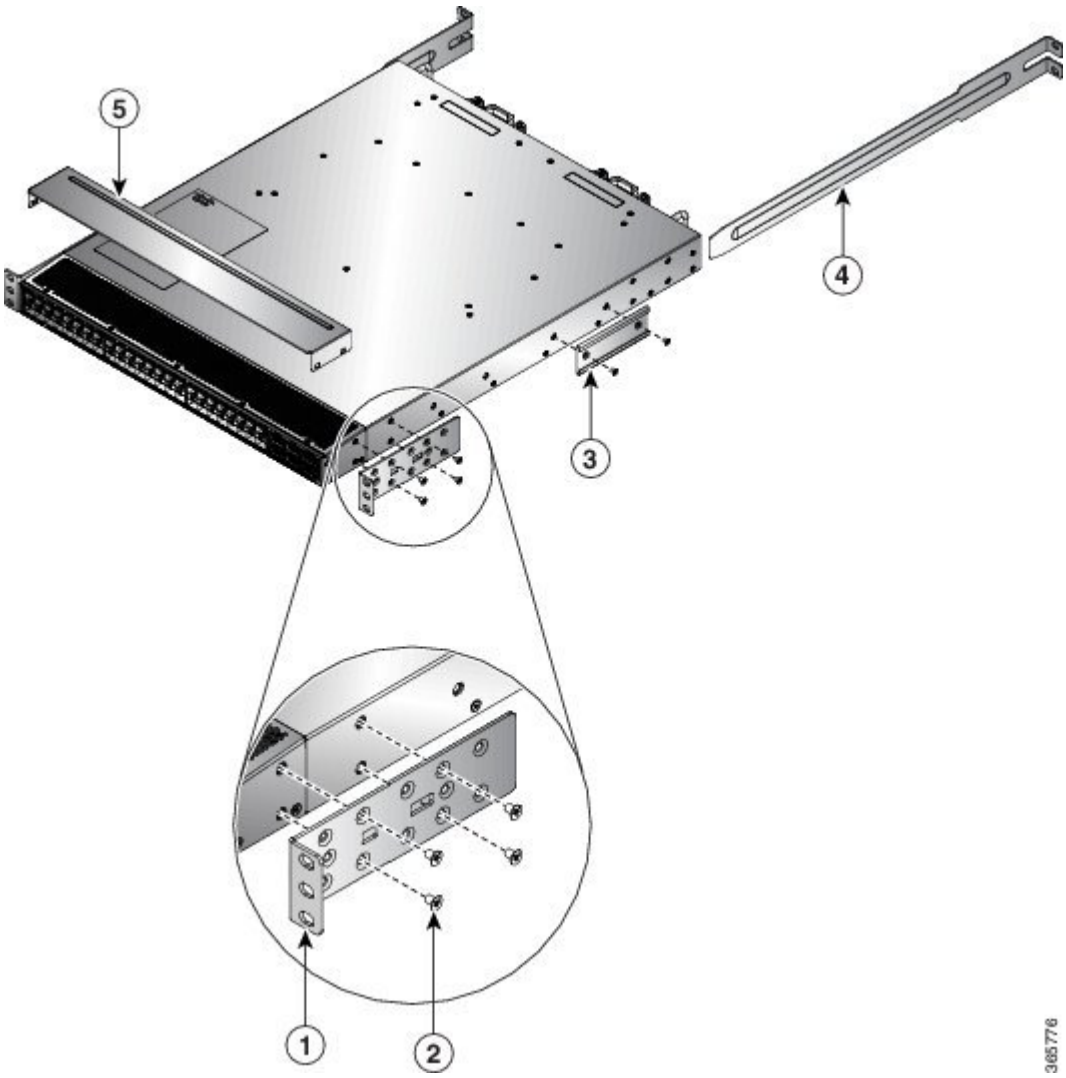

Figure 2: Rack-Mount Brackets on Cisco NCS 5501—Port-Side Exhaust

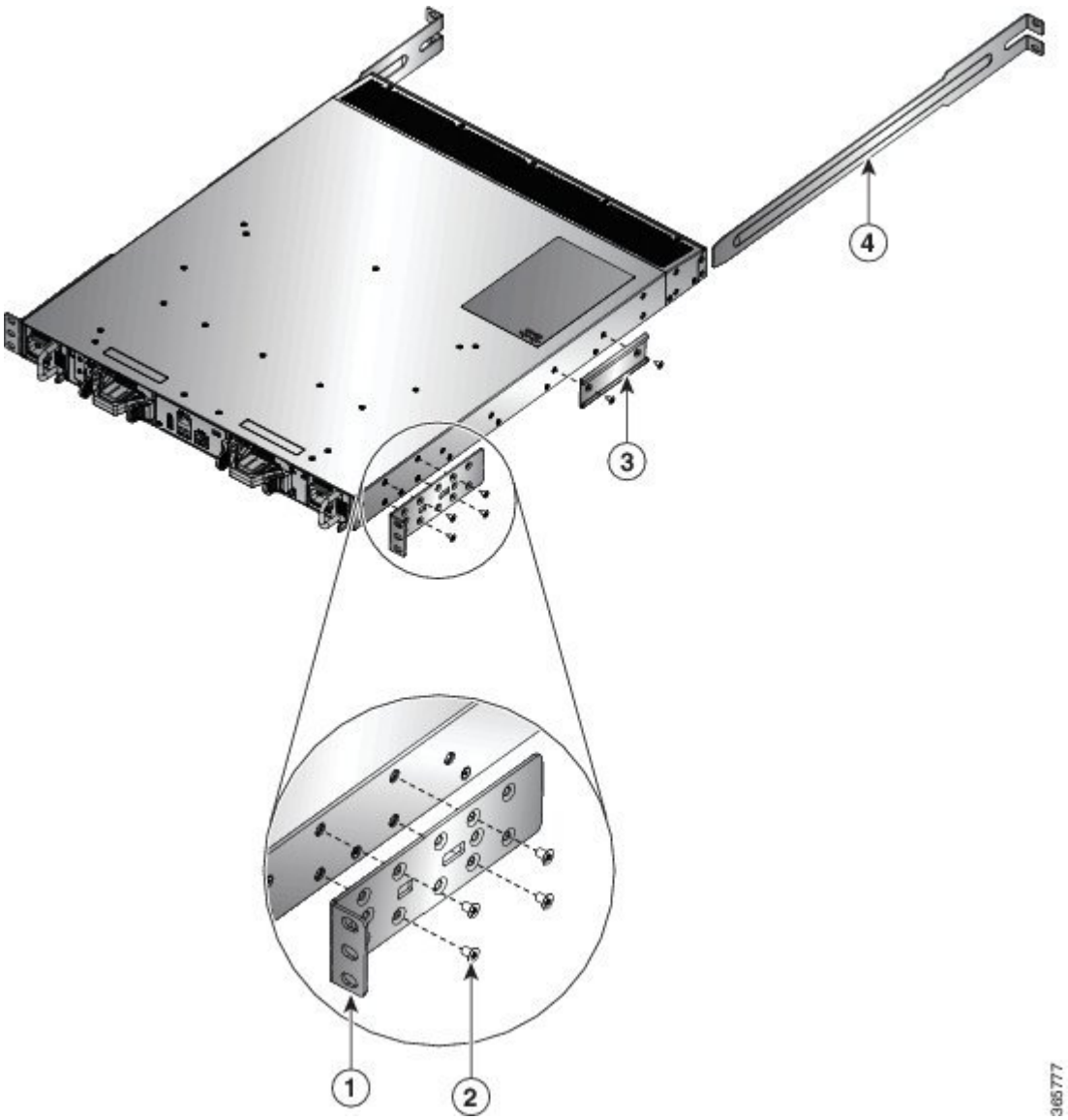

1	Rack-mount bracket	4	Rack-mount slider rails
2	M4 x 6mm Phillips flat-head screws	5	Top plate
3	Rack-mount guides		

Figure 3: Rack-Mount Brackets on Cisco NCS 55A1-36H-S and Cisco NCS 55A1-36H-SE-S—Port-Side Intake

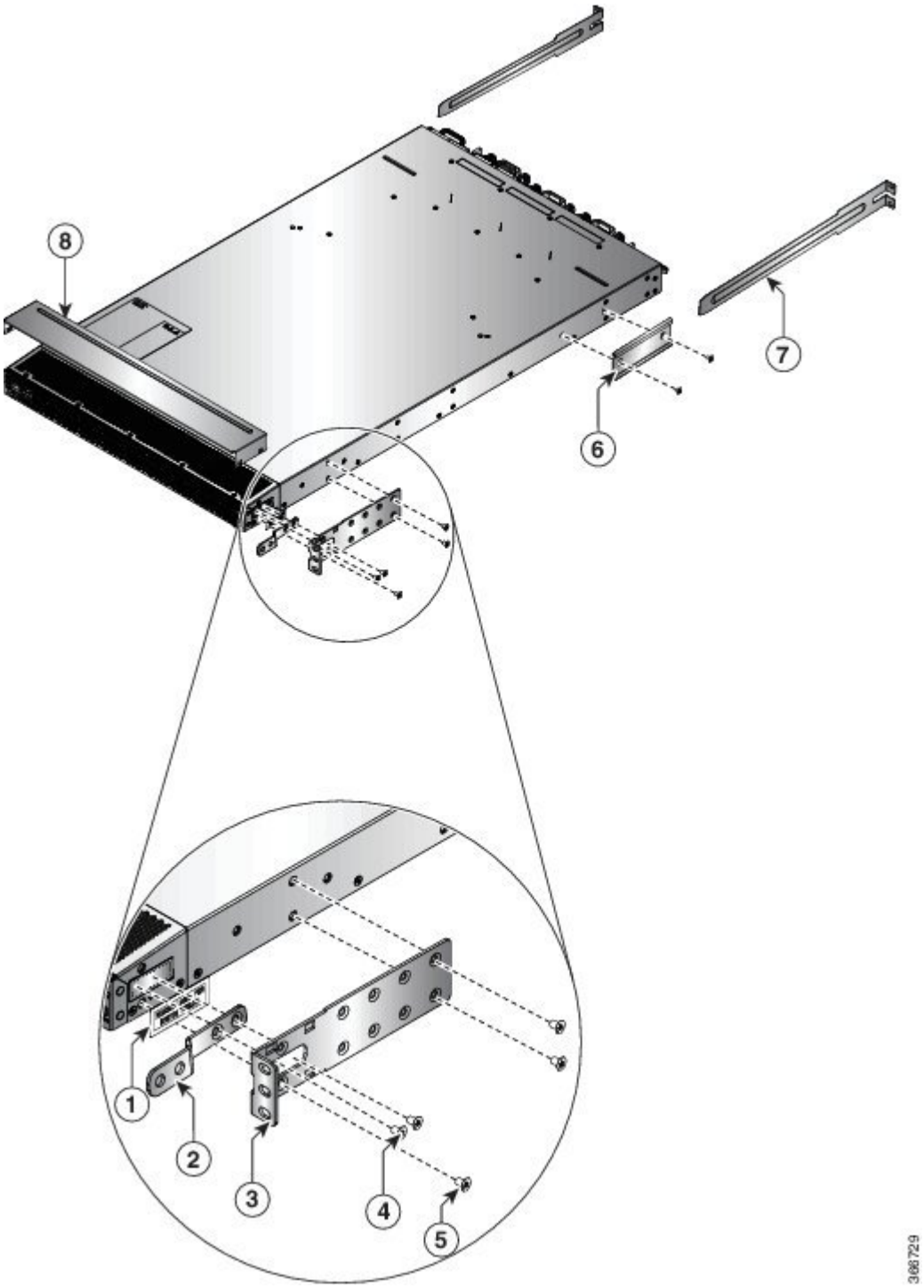

Figure 4: Rack-Mount Brackets on Cisco NCS 55A1-36H-S and Cisco NCS 55A1-36H-SE-S—Port-Side Exhaust

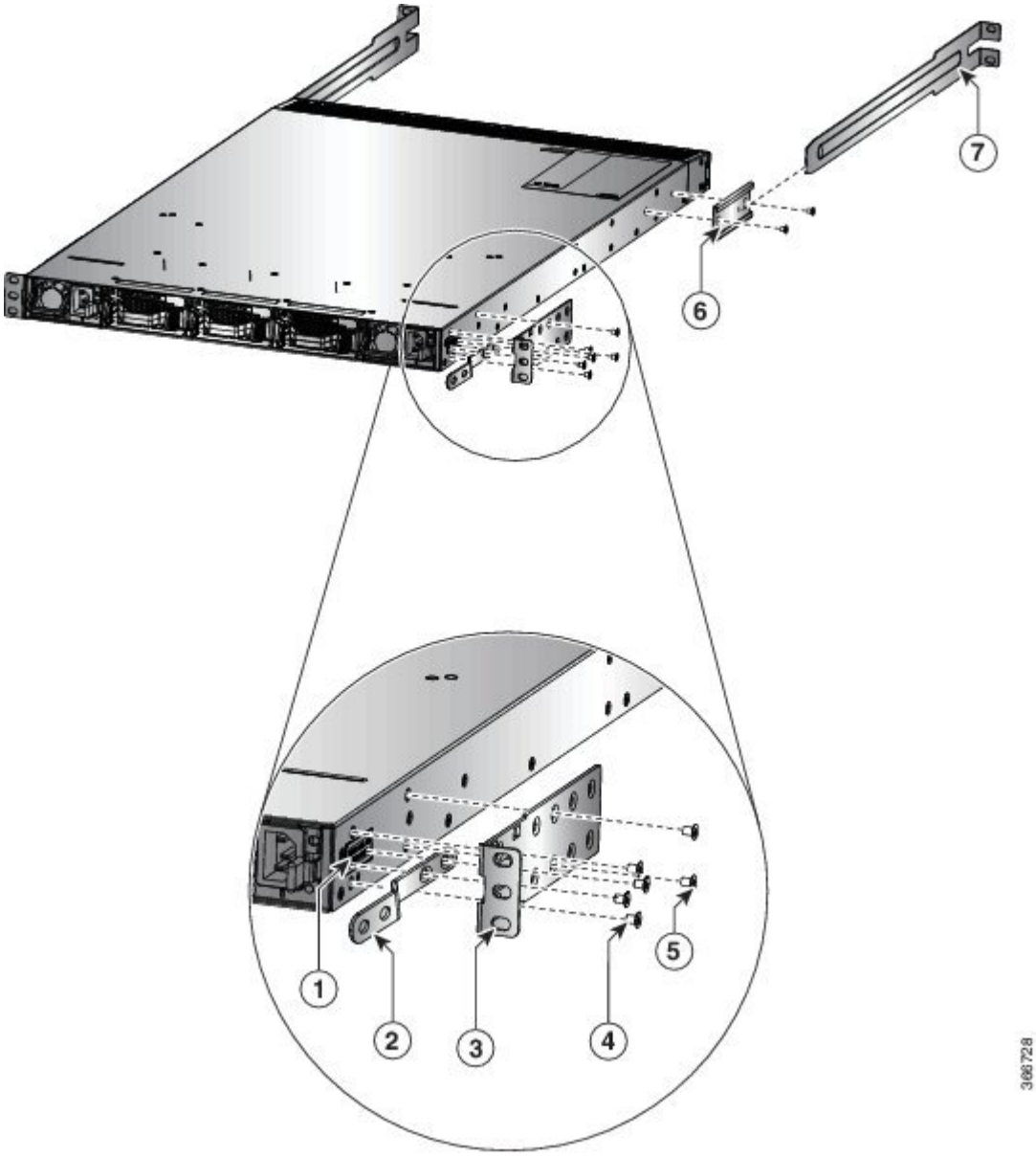

1	Grounding cover label	5	M4 x 6mm Phillips flat-head screws
2	Grounding cover plate	6	Rack-mount guide
3	Rack-mount brackets	7	Rack-mount slider rails
4	M4 x 6mm Phillips flat-head screws	8	Top plate

Figure 5: Rack-Mount Brackets on Cisco NCS 5502 and NCS 5502 SE—Port-Side Intake

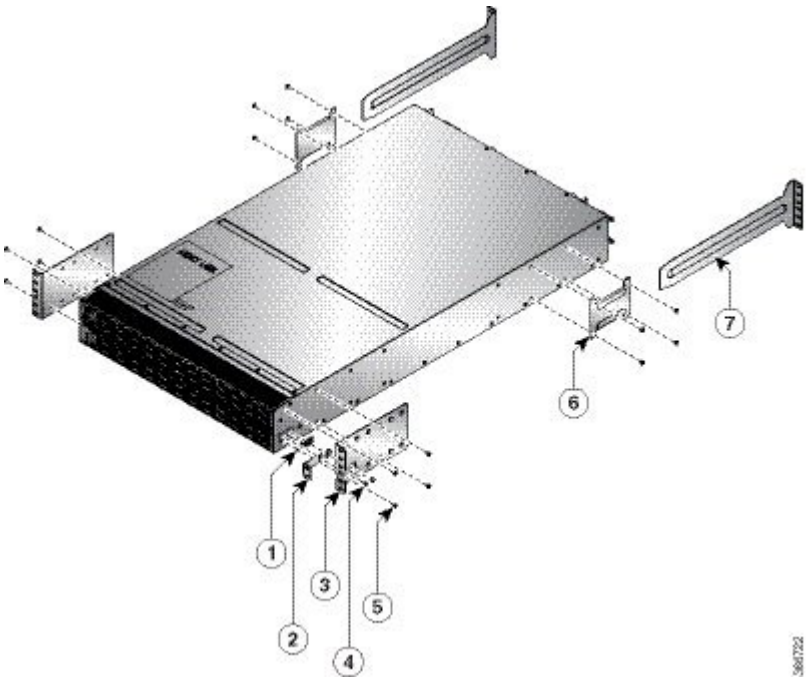

Figure 6: Rack-Mount Brackets on Cisco NCS 5502 and NCS 5502 SE—Port-Side Exhaust

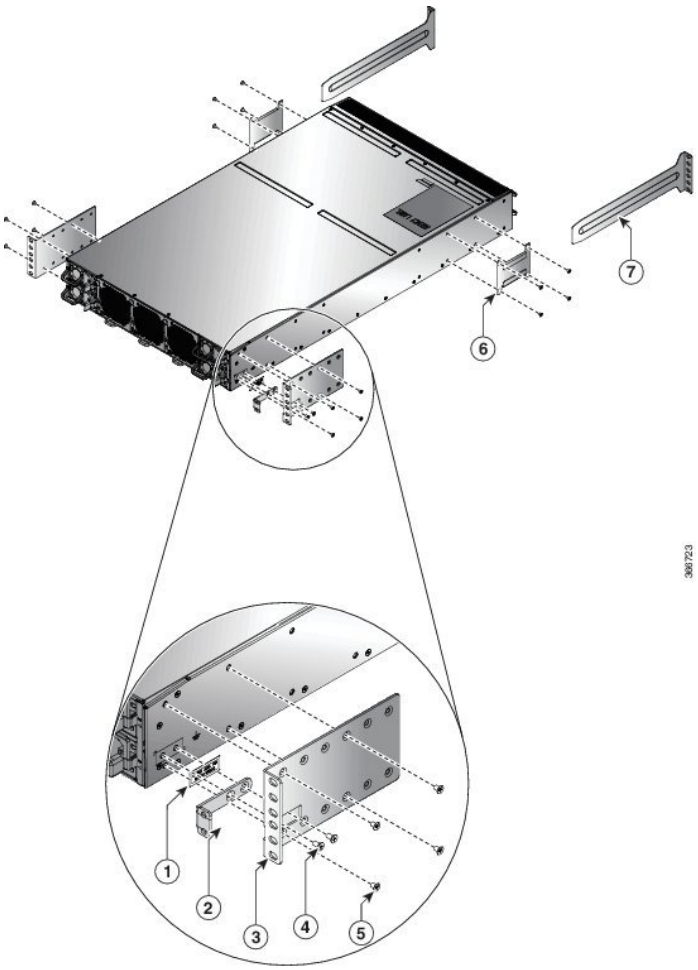

1	Grounding cover label	5	M4 x 8mm Phillips-Flat head screws
2	Grounding cover plate	6	Rack-mount guide
3	Rack-mount brackets	7	Rack-mount slider rails
4	M4 x 8mm Phillips-Flat head screws		

c) Repeat Step 1b with the other rack-mount bracket on the other side of the router.

Step 2 **Cisco NCS-55A1-24H, Cisco NCS 55A1-36H-S, Cisco NCS 55A1-36H-SE-S, NCS 5501, and NCS 5501-SE**: The top plate is required for NEBS compliance when the router is installed with the ports in the cold aisle (port-side air intake). Install the top plate by pressing the ends of the plate on to the rack-mount brackets.

- If you are installing multiple routers with space between each router, install a top plate on each router.
- If you are installing multiple routers that are stacked, install the top plate only on the top router.

Note The top plate is part of the orderable NEBS kit.

Step 3 Install the two rack-mount guides on the chassis as follows:

a) Position a rack-mount guides on the side of the chassis with its two holes aligned to the two screw holes on the side of the chassis, and then use two M4 screws to attach the guides to the chassis.

b) Repeat with the other rack-mount guides on the other side of the router.

Step 4 Install the slider rails to the rack as follows:

a) Position the slider rails at the desired levels on the back side of the rack and use two 12-24 screws or two 10-32 screws, depending on the rack thread type, to attach the rails to the rack.

Note For racks with square holes, you might need to position a 12-24 cage nut behind each mounting hole in a slider rail before using a 12-24 screw.

b) Repeat with the other slider rail on the other side of the rack.

c) Use a tape measure and level to verify that the rails are at the same height and horizontal.

Step 5 Insert the router into the rack and attach it as follows:

a) Holding the router with both hands, position the back of the router between the front posts of the rack.

b) Align the two rack-mount guides on either side of the router with the slider rails installed in the rack. Slide the rack-mount guides onto the slider rails, and then gently slide the router all the way into the rack.

Note If the router does not slide easily, try realigning the rack-mount guides on the slider rails.

c) Holding the chassis level, insert two screws (12-24 or 10-32, depending on the rack type) through the holes in each of the rack-mount brackets and into the cage nuts or threaded holes in the rack-mounting rail.

d) Tighten the 10-32 screws to 20 in-lb (2.26 N.m) or tighten the 12-24 screws to 30 in-lb (3.39 N.m).

Rack Mount the Chassis in a 4-Post Rack — Procedure 2

This section describes how to install the Cisco NCS-55A2-MOD-HD-S, Cisco NCS-55A2-MOD-HX-S and Cisco NC55A2-MOD-SE-H-S chassis on the 4-post rack, using sliders.

Sliders

The sliders are used to install the Cisco NCS-55A2-MOD-HX-S and Cisco NC55A2-MOD-SE-H-S chassis on a 4-post outdoor rack. Sliders are used to access the fan trays in the chassis easily during maintenance.

The sliders are designed such that the air filters (NCS-55A2-FLTR-FW) can also be accomodated in the chassis installation. There are two types of sliders:

- NC55-2RU-ACC-SL1: Designed for custom made cabinets that are 476 mm wide (min. 650 x650 mm), or for cabinets with equivalent specifications.

  Rack Requirements to Install NC55-2RU-ACC-SL1:

  - 4-post rack
  - 476 cm wide center to center rail mounting.
  - The width between the front rack-mounting rails must be at least 17.75 inches (45.0 cm)
  - The minimum spacing for the bend radius for fiber-optic cables should have the front-mounting rails of the cabinet offset from the front door by a minimum of 4.7 inches (12.0 cm).

- The minimum spacing between the front-mounting rails of the cabinet to the inner surface of the front door shall be min. 5.8 inches (14.7 cm). Depend on cabinet ambient thermal set-point this distance can change.
- The distance between the outside face of the front mounting rail and the outside face of the back-mounting rail should be 16.0 to 19.9 inches (40.7to 50.5 cm) to allow for rear-bracket installation.

- NC55-2RU-ACC-SL2: Designed for 19-inch (min. 650 x650 mm) EIA cabinet standard 4-post rack.

  Rack Requirements to Install NC55-2RU-ACC-SL2:

  - Standard 19-inch (48.3 cm) (four-post EIA cabinet, with mounting rails that conform to English universal hole spacing per section 1 of ANSI/EIA-310-D-1992.)
  - The width between the front rack-mounting rails must be at least 17.75 inches (45.0 cm.)
  - The minimum spacing between the front-mounting rails of the cabinet to the inner surface of the front door shall be min. 5.8 inches (14.7 cm). Depending on the cabinet ambient thermal set-point this minimum distance can change.
  - The minimum spacing for the bend radius for fiber-optic cables should have the front-mounting rails of the cabinet offset from the front door by a minimum of 4.7 inches (12.0 cm).
  - The distance between the outside face of the front mounting rail and the outside face of the back-mounting rail should be 16.5 to 19 inches (41.9 to 48.26 cm) to allow for rear-bracket installation.

The slider assembly consists of three parts:

- Inner Slider Member
- Middle Slider Member
- Outer Slider Member

Note The front end of the outer slider member may vary between **NC55-2RU-ACC-SL1** and **NC55-2RU-ACC-SL2**.

The outer slider member of NC55-2RU-ACC-SL2 is mounted to the front post with 2 screws, whereas, the outer slider member of NC55-2RU-ACC-SL1 is passed through the rack holes of the front post and latched to the rack.

Figure 7: Slider Assembly

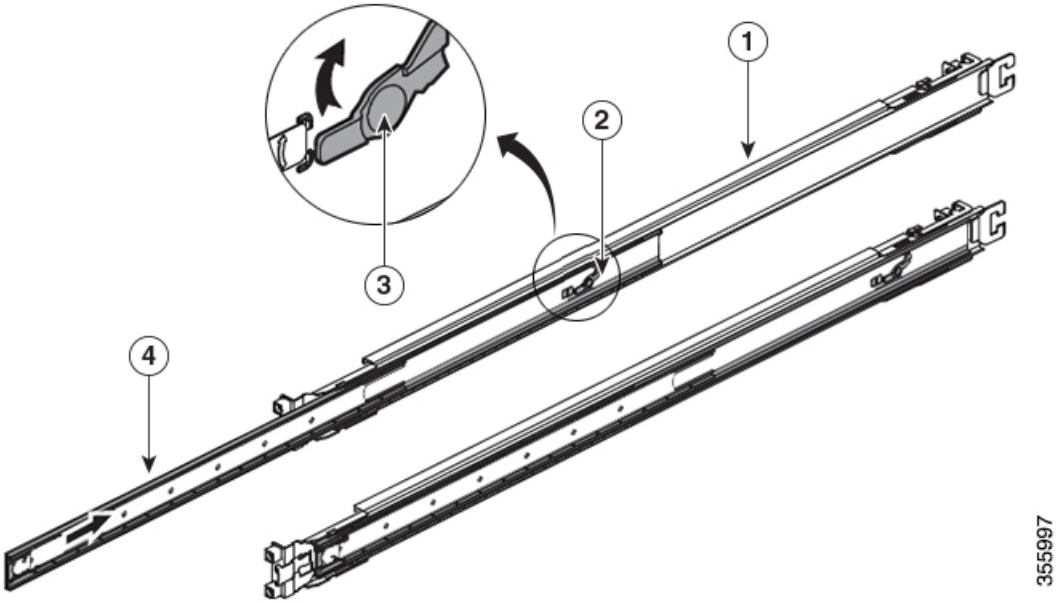

1	Outer Slider Member	2	Middle Slider Member
3	Unlock Feature on the Middle Slider Member	4	Inner Slider Member

The following table lists the items that are contained in the Cisco NCS-55A2-MOD-HD-S, Cisco NCS-55A2-MOD-HX-S and Cisco NC55A2-MOD-SE-H-S Router rack-mount kit.

Table 4: Cisco NCS-55A2-MOD-HD-S, Cisco NCS-55A2-MOD-HX-S and Cisco NC55A2-MOD-SE-H-S Router Rack-Mount Kit

Quantity	Part Description
2	Rack-mount brackets
2	Rack-mount slider rails
8	M4 x 8-mm Phillips counter sink screws
2	M4 x 8-mm Phillips pan-head screws
1	Grounding lug
6	(Only NC55-2RU-ACC-SL1) M4 x 10-mm Phillips pan-head screws
6	(Only NC55-2RU-ACC-SL2) M4 x 8-mm Phillips flat-head screws
4	(Only NC55-2RU-ACC-SL2) washers
4	(Only NC55-2RU-ACC-SL2) 10-32 counter sink screws
4	(Only NC55-2RU-ACC-SL2) 9.1 mm rack mount pins

Quantity	Part Description
4	(Only NC55-2RU-ACC-SL2) 8.8 mm rack mount pins

Step 1 Remove the inner slider member from the slider assembly, by depressing the white tab present at the front of the slider assembly (on the outer slider member).

Figure 8: Remove the Inner Slider Member from the Slider Assembly

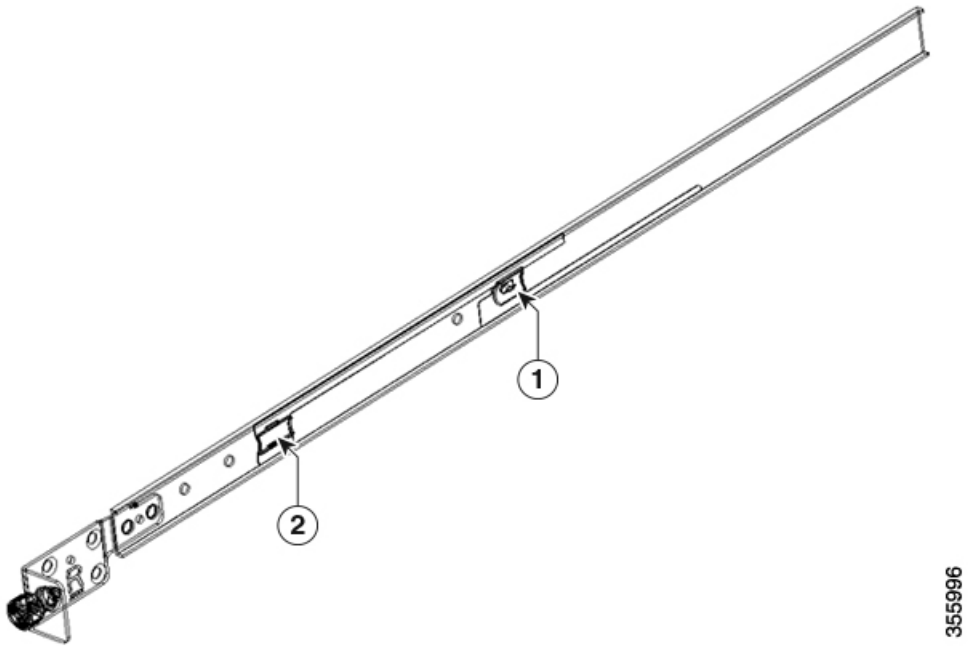

1	White Tab	2	Blue Tab

Step 2 Push the unlock feature of the middle slider member and slide the middle slider member back to the slider assembly.

Step 3 Attach the inner slider member to the sides of the chassis:

a. Align the inner slider member with one side of the chassis and use three M4 screws and tighten the screws to 12 in-lbs (1.4 N-m).

Note For NC55-2RU-ACC-SL1, use M4 x 10-mm pan head screws.

For NC55-2RU-ACC-SL2, use M4 x 8-mm flat head screws.

b. Repeat 3a to install the inner slider member to the other side of the chassis.

Figure 9: Install the Inner Slider Member to the Chassis

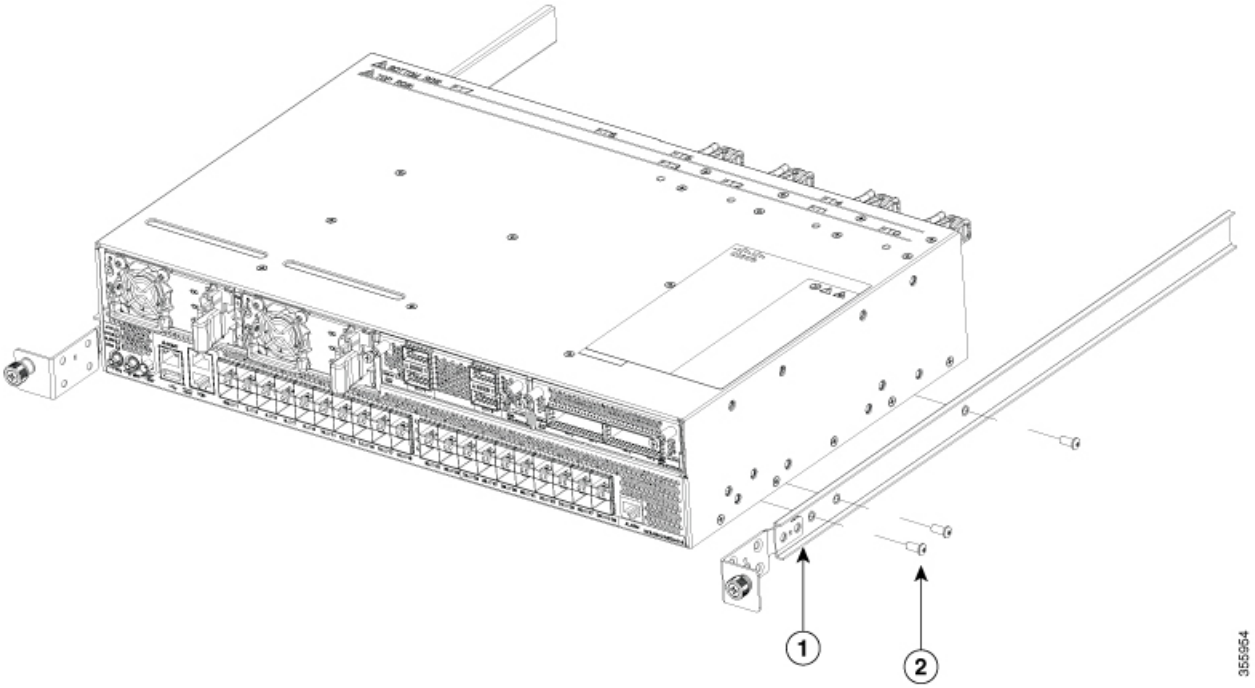

1	Inner slider member	2	M4 x 10-mm Phillips pan head or M4 x 8-mm Phillips f head screws, based on the slider.

Step 4 Install the outer slider member to the rack:

a. Align the rack mount pins of the outer slider to the rear post rack holes.

Note If the rack mount pins of the outer slider member do not fit the rack hole dimensions, use the pins that are provided in the package.

b. (NC55-2RU-ACC-SL1) The front end of the outer slider member passes through the screw holes of the rack and latches to the rack. See the "Rear and Front End (NC55-2RU-ACC-SL1) of the Outer Slider Member" figure.

(NC55-2RU-ACC-SL2) Adjust the slider (push and pull) to place and fix the slider behind the front post. Attach the slider to the front post with 2 counter sink screws (10-32) and washers. See the "Rear and Front End (NC55-2RU-ACC-SL2) of the Outer Slider Member" figure.

Note Remove the screw thread adapter present at the front end of the outer slider member if you are unable to pass the slider through the rack holes. Tighten the screws later after passing the slider through the rack holes.

Figure 10: Rear and Front End (NC55-2RU-ACC-SL1) of the Outer Slider Member

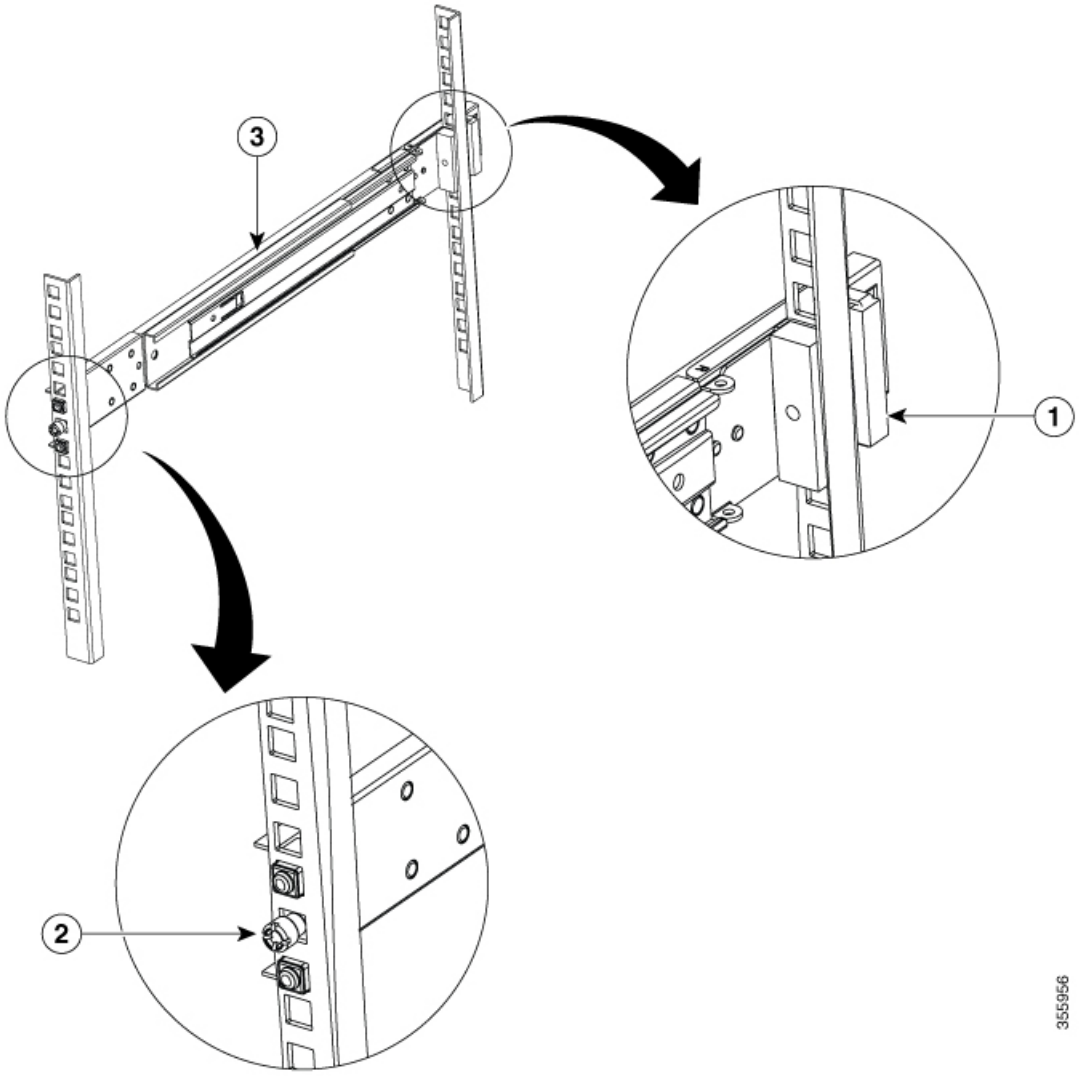

1	Rear End- Outer slider member	2	Screw thread adapter at the Front End- Outer slic
3	Outer slider member		

Figure 11: Rear and Front End (NC55-2RU-ACC-SL2) of the Outer Slider Member

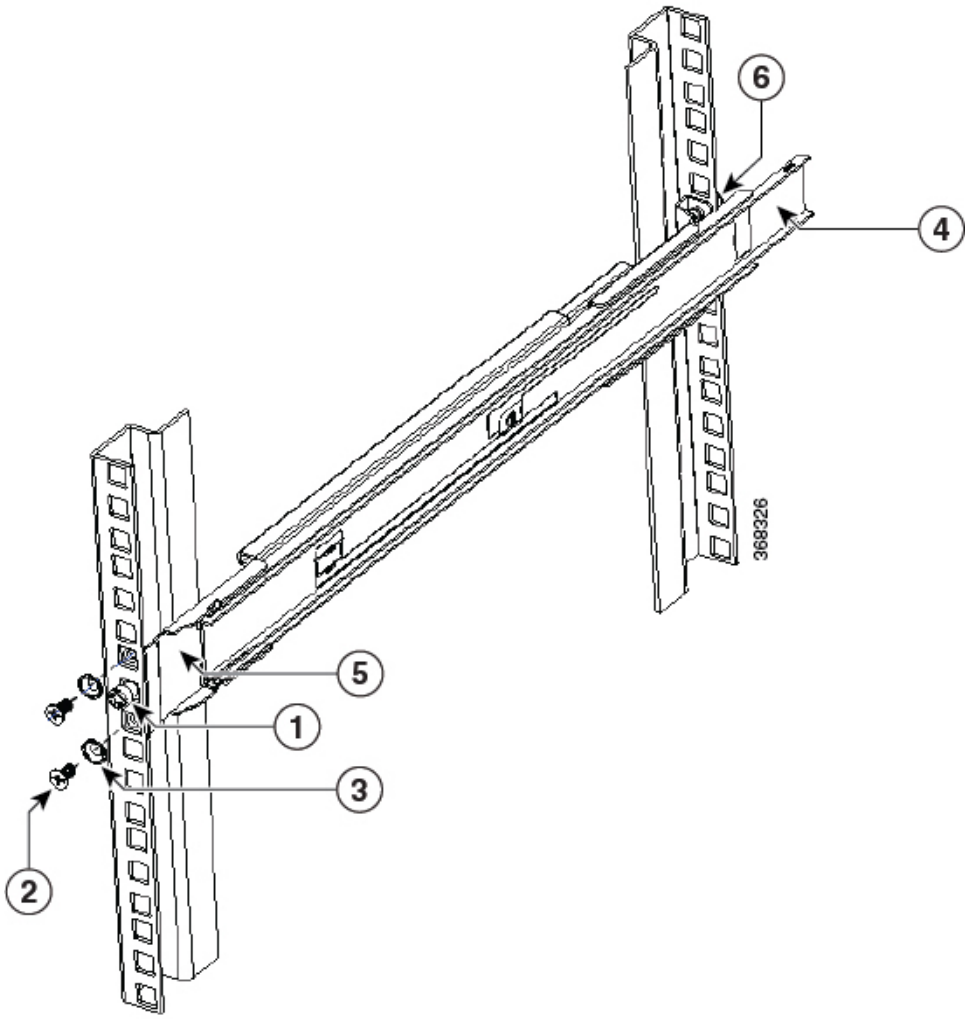

1	Screw thread adapter at the Front End- Outer slider member	2	Counter sink screws
3	Washer	4	Rear end - Outer slider member
5	Front end - Outer slider member	6	Rear end - Rack mount pin

c. Repeat 4a through 4b to install the outer slider member to the other side of the chassis.

Figure 12: Install the Outer Slider Member to the Rack

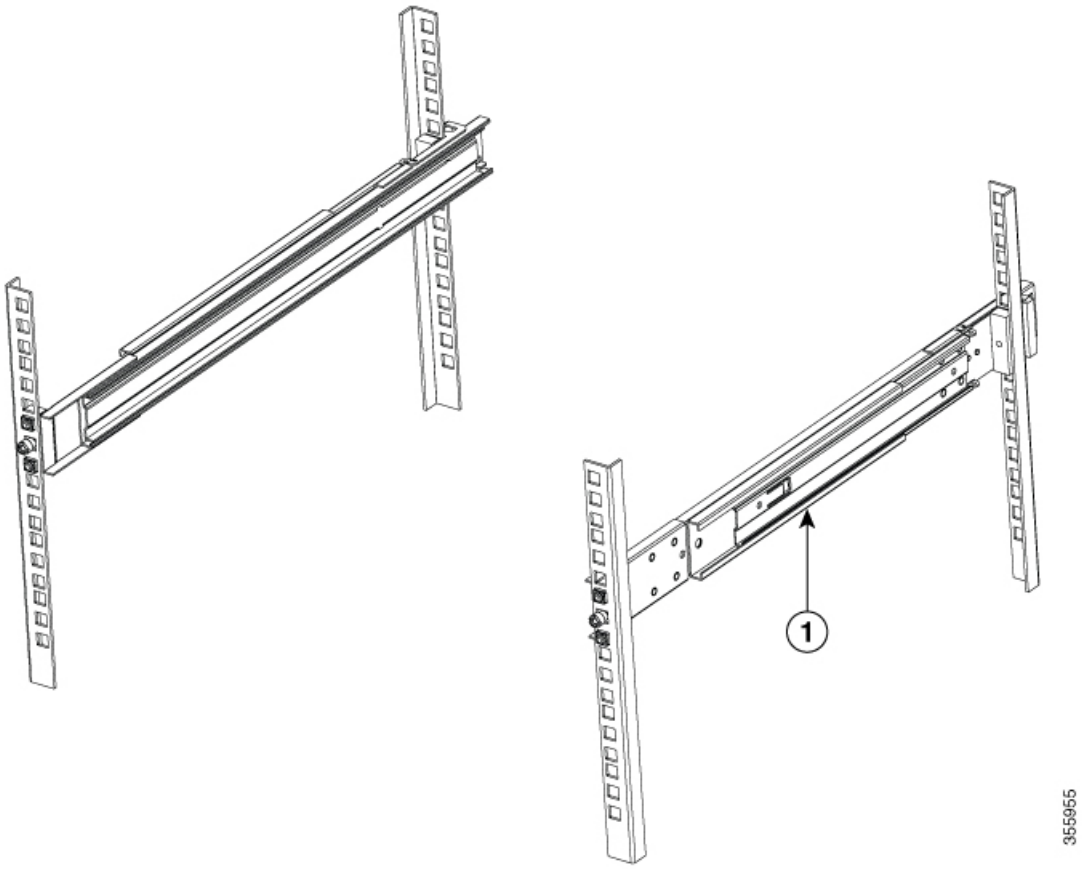

1	Outer slider member		

Step 5 Pull the middle slider member from the slider assembly to an extended position.

Figure 13: Extend the Middle Slider Member

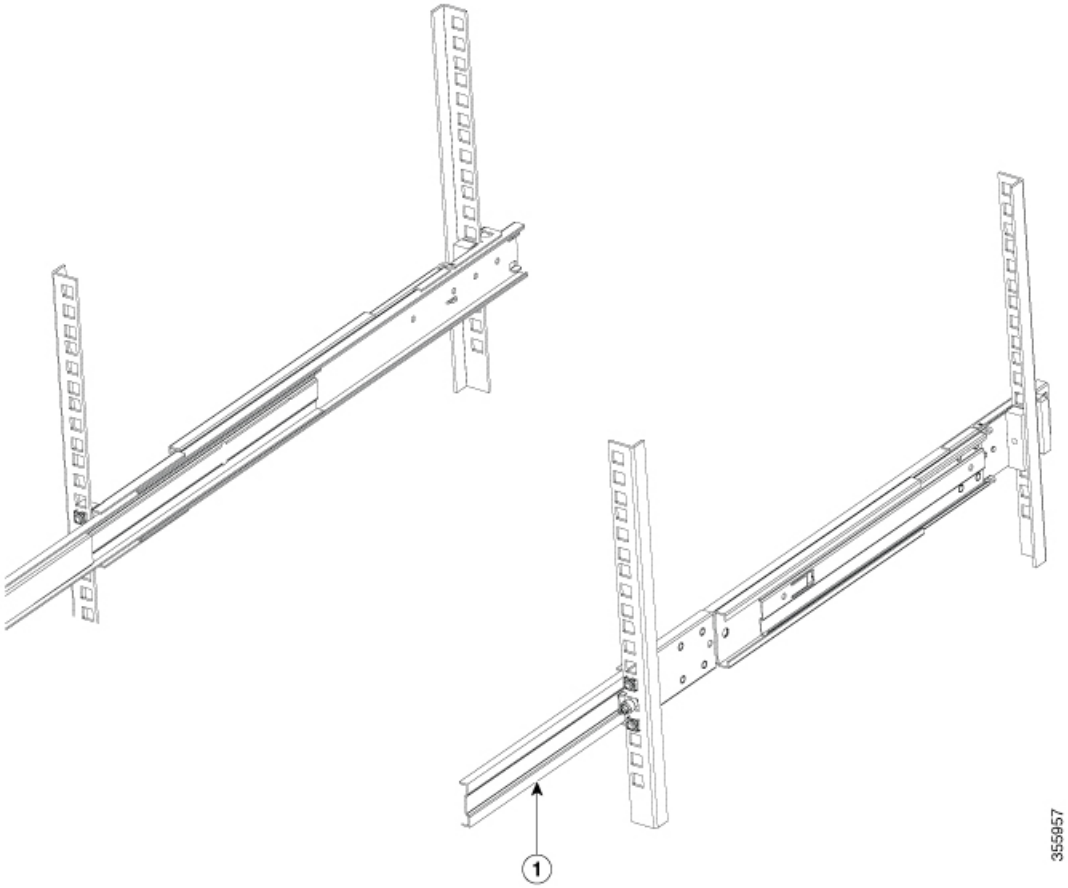

1	Middle slider member		

Step 6 Insert the chassis that already has the inner slider members attached, to the middle slider member on the rack.

Step 7 Slide the chassis into middle slider member until it cannot be pushed further.

Figure 14: Install the Chassis to the Rack

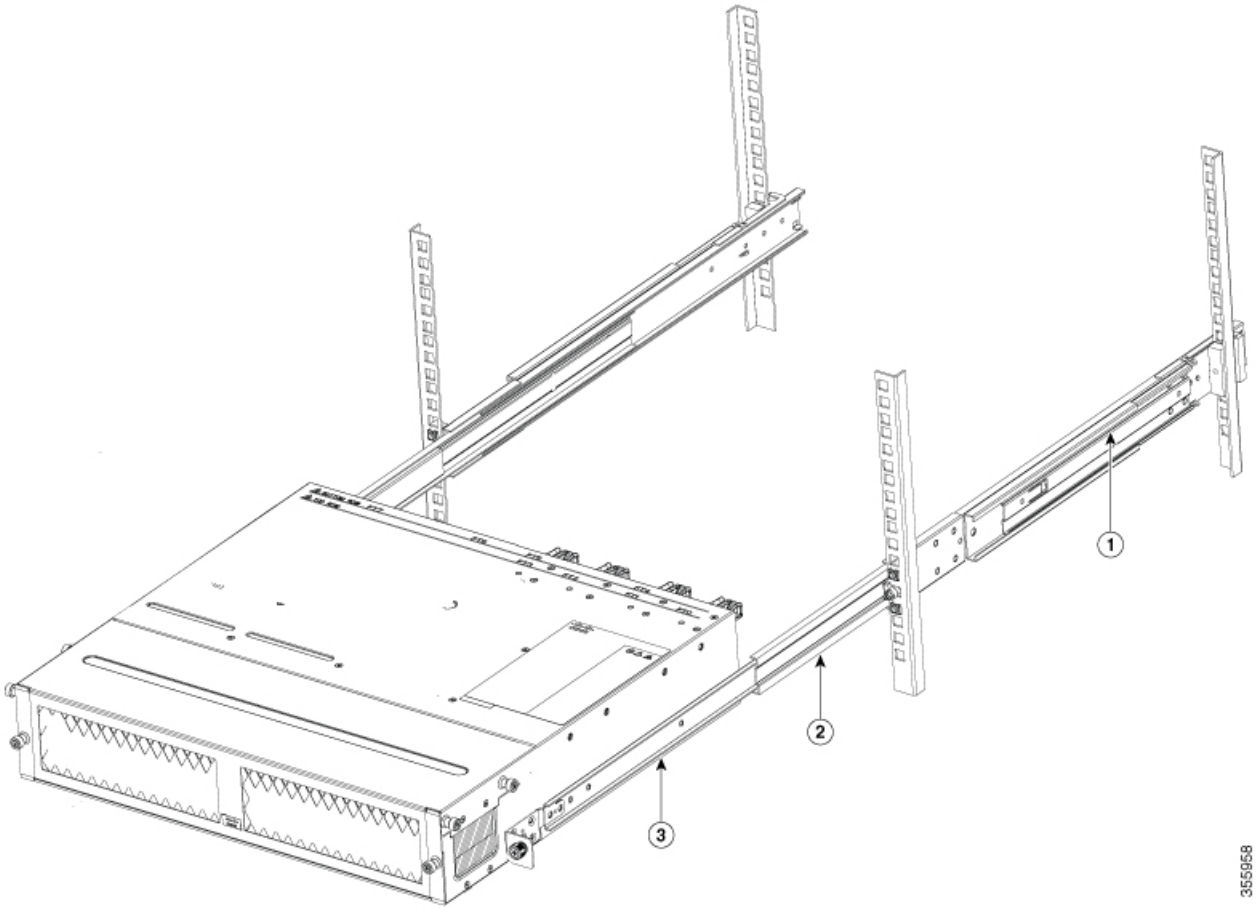

1	Outer slider member	2	Middle slider member
3	Inner slider member		

Step 8 Pull the blue release tab on the inner slider member on both sides simultaneously to release the lock position. Continue to push the chassis to the rack.

Figure 15: Install the Chassis to the Rack

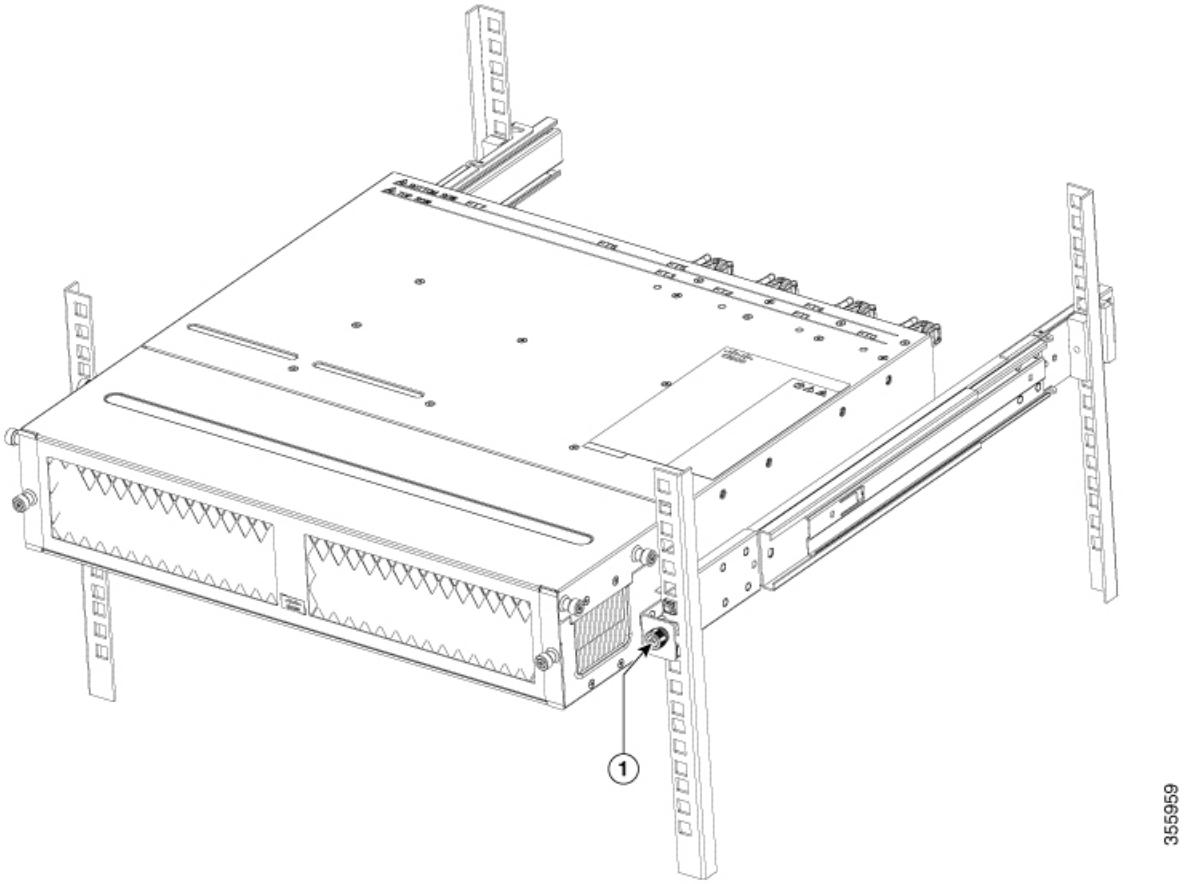

Step 9 Tighten the thumbscrews on either side of the chassis, that is aligned with the screw thread adapter of the outer slider member through the rack holes.

What to do next

Installing the Air Filter to the Chassis on a 4-Post Rack, on page 26

Rack-Mount the Chassis in a 2-Post Rack — Procedure 1

This section describes how to use the rack-mount kit provided with the router to install the following routers into a cabinet or 2-post rack:

- Cisco NCS-55A1-24H
- Cisco NCS 5501
- Cisco NCS 5501-SE
- Cisco NCS-55A1-24Q6H-S

- Cisco NCS-55A1-24Q6H-SS

Caution If the rack is on wheels, ensure that the brakes are engaged or that the rack is otherwise stabilized.

The following table lists the items contained in the rack-mount kit provided with the routers.

Table 5: Cisco NCS-55A1-24H, Cisco NCS 5501, Cisco NCS 5501-SE, and Cisco NCS-55A1-24Q6H-S Router Rack-Mount Kit

Quantity	Part Description
2	Rack-mount brackets
8	M4 x 0.7 x 6-mm Phillips flat-head screws

Step 1 Install two rack-mount brackets to the router as follows:

a) Determine which end of the chassis is to be located in the cold aisle as follows:

- If the router has port-side intake modules (fan modules with burgundy coloring), position the router so that its ports will be in the cold aisle.
- If the router has port-side exhaust modules (fan modules with blue coloring), position the router so that its fan and power supply modules will be in the cold aisle.

b) Do the following:

Cisco NCS-55A1-24H, Cisco NCS 5501, Cisco NCS 5501-SE, Cisco NCS-55A1-24Q6H-S , and Cisco NCS-55A1-24Q6H-SS router—With the bracket ears facing toward the center of the chassis, position a front rack-mount bracket on the side of the chassis so that the four holes are aligned to four of the screw holes on the side of the chassis.

c) Use four M4 screws with 12 in-lbs (1.4 N-m) to attach the bracket to the chassis

d) Repeat Steps 1b and 1c with the other rack-mount bracket on the other side of the router. The following image shows the rack-mount brackets on the Cisco NCS 5501. The bracket installation is the same for the Cisco NCS 5501-SE and and Cisco NCS 55A1-24H.

Figure 16: Rack-mount brackets on Cisco NCS 5501

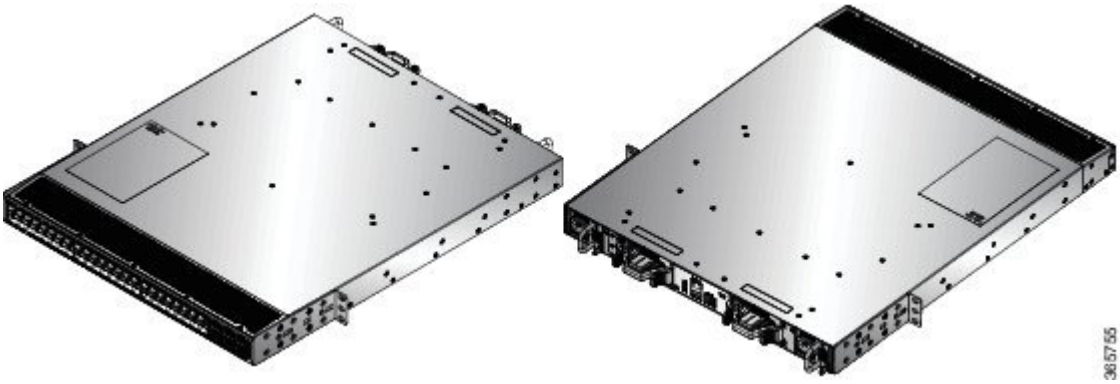

Figure 17: Rack-mount brackets on Cisco NCS 5501

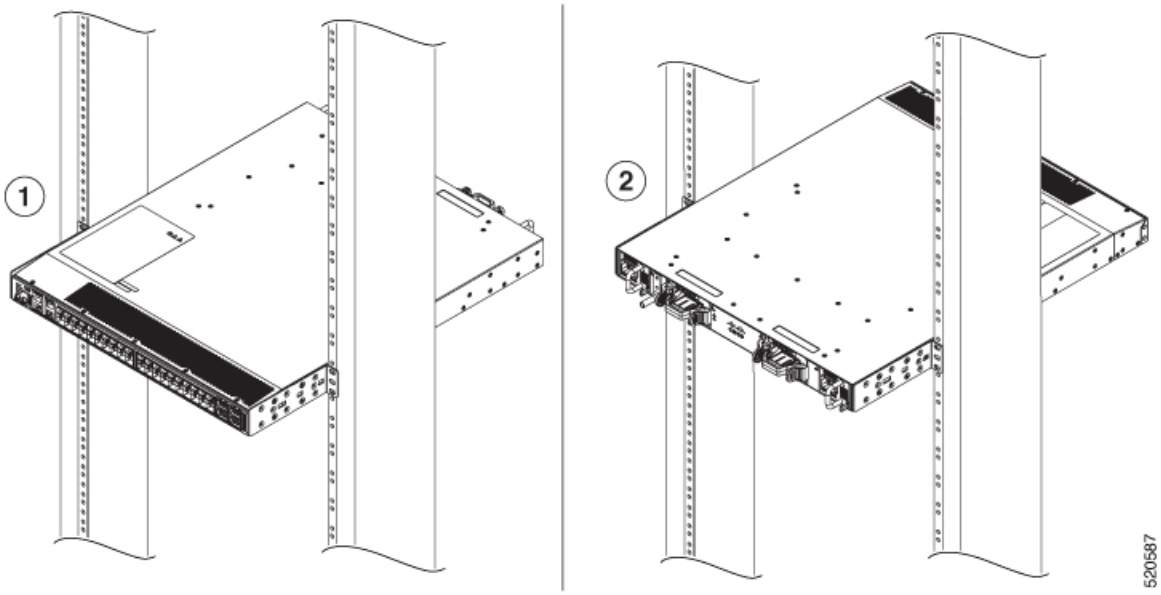

1	Port Side Intake Installation	2	Port Side Exhaust Installation

Step 2 Install the router onto the 2-post rack as follows:

a) With two people, lift the router into position between the two rack posts.

b) Move the router until the rack-mount brackets come in contact with two rack posts.

c) Hold the chassis level while the second person inserts two screws (12-24 or 10-32, depending on the rack type) in each of the two rack-mount brackets (using a total of four screws) and into the cage nuts or threaded holes in the vertical rack-mounting rails.

d) Tighten the 10-32 screws to 20 in-lb (2.26 N.m) or tighten the 12-24 screws to 30 in-lb (3.39 N.m).

Rack Mount the Chassis in a 2 Post Rack — Procedure 2

This section describes how to use the rack-mount kit provided with the chassis, to install the following chassis into a cabinet or a 2-post rack:

- Cisco NCS-55A2-MOD-S
- Cisco NCS-55A2-MOD-HD-S
- Cisco NCS-55A2-MOD-SE-S
- Cisco NCS-55A2-MOD-HX-S
- Cisco NC55A2-MOD-SE-H-S

⚠

Caution If the rack is on wheels, ensure that the brakes are engaged or that the rack is otherwise stabilized.

The following table lists the items contained in the rack-mount kit provided with the routers.

Table 6: Cisco NCS 55A2-MOD-SE-S , Cisco NCS-55A2-MOD-HX-S, Cisco NC55A2-MOD-SE-H-S Router Rack-Mount Kit

Quantity	Part Description
2	Rack-mount brackets
8	M4 x 8-mm Phillips counter sink screws

Depending on the type of the rack, the following rack mount brackets can be used:

- 19-inch Rack: NC55A2-RCKMNT-19 brackets
- 23-inch Rack: NC55A2-RCKMNT-23 brackets
- ETSI Rack: N55A2-RCKMNT-ETSI brackets

Note In addition, use the cable guide bracket (NCS-55A2-CAB-MGMT) for managing the cables in Cisco NCS 55A2-MOD-SE-S, Cisco NCS-55A2-MOD-HX-S and Cisco NC55A2-MOD-SE-H-S. The cable guide bracket is optional and is obtained in the accessory kit (NC55-2RU-ACCX-KIT).

Step 1 Install two rack-mount brackets to the router as follows:

a) Position the router so that its ports will be in the cold aisle.
b) With the bracket ears aligned to the front of the chassis, position a rack-mount bracket on the side of the chassis so that the four holes are aligned to four of the screw holes on the side of the chassis.
c) Use four M4 screws with 12 in-lbs (1.4 N-m) to attach the bracket to the chassis
d) Repeat Steps 1b and 1c with the other rack-mount bracket on the other side of the router.

Figure 18: Rack-Mount Brackets on Cisco NCS 55A2-MOD-S , Cisco NCS 55A2-MOD-HD-S , Cisco NCS 55A2-MOD-SE-S, Cisco NCS-55A2-MOD-HX-S and Cisco NC55A2-MOD-SE-H-S

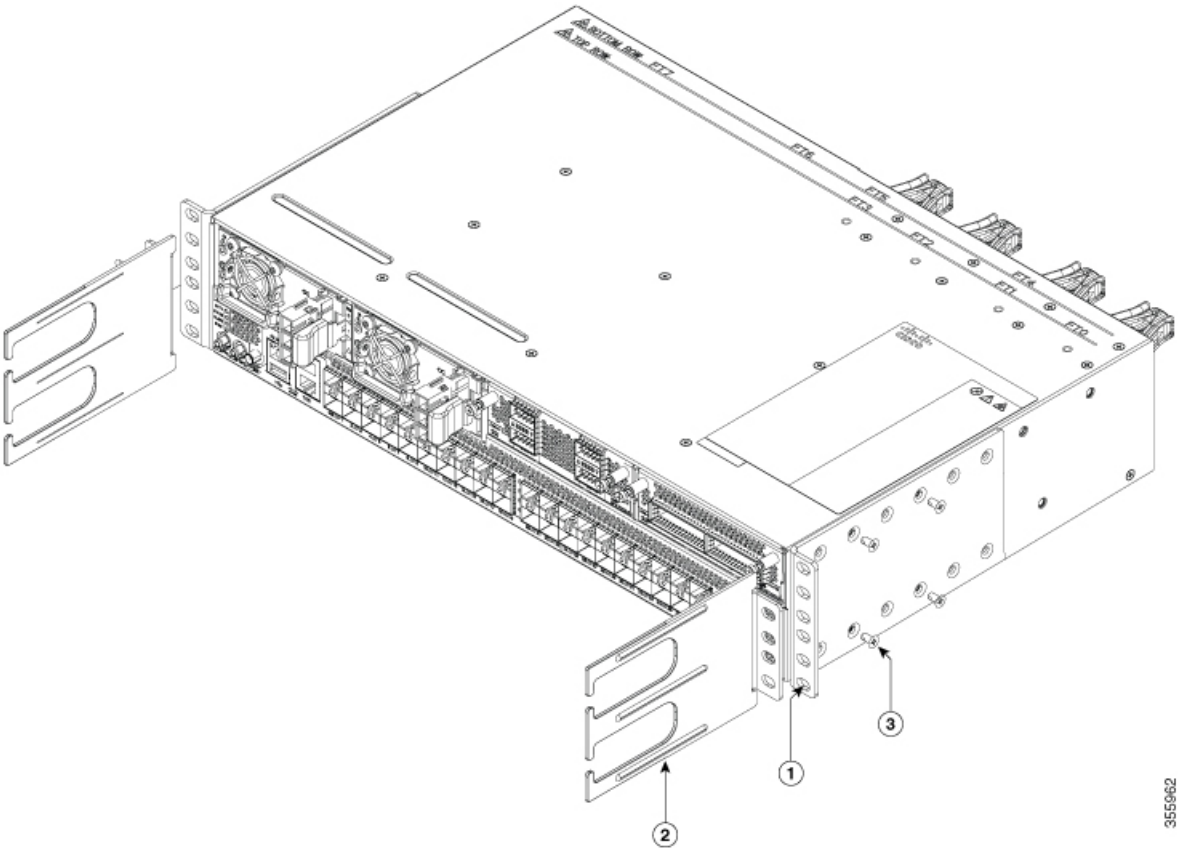

1	Rack-mount brackets	2	Cable guide
3	M4 x 8 Phillips counter sink screws		

Step 2 Install the router onto the 2-post rack as follows:

a) With two people, lift the router into position between the two rack posts.

b) Move the router until the rack-mount brackets come in contact with two rack posts.

c) Hold the chassis level while the second person inserts two screws (12-24 or 10-32, depending on the rack type) in each of the two rack-mount brackets (using a total of four screws) and into the cage nuts or threaded holes in the vertical rack-mounting rails.

d) Tighten the 10-32 screws to 20 in-lb (2.26 N.m) or tighten the 12-24 screws to 30 in-lb (3.39 N.m).

What to do next

Installing the Air Filter to the Chassis on a 2-Post Rack (Port Side Inlet), on page 28

Install the Air Filter

Note Air filters are available for Cisco NCS-5502-SE and NCS-5502. The air filters are for one-time use only.

Note In general, we recommend that you inspect the air filter every three months and replace, if necessary, every 6 months.

Install the Air Filter on the Port Side Inlet

If the air filter on the port-side inlet needs replacement, follow this procedure.

Note To fix the top and bottom filters (NCS-5502-FLTR-FW) use a manual screwdriver to gently turn the screws. Ensure that you turn the screws only three to four times, and that you do not overtighten the screws.

Step 1 Place the top air filter section on the top port-side of the chassis and secure it with the two screws at the upper left and right.

Figure 19: Port-side Inlet Air Filter

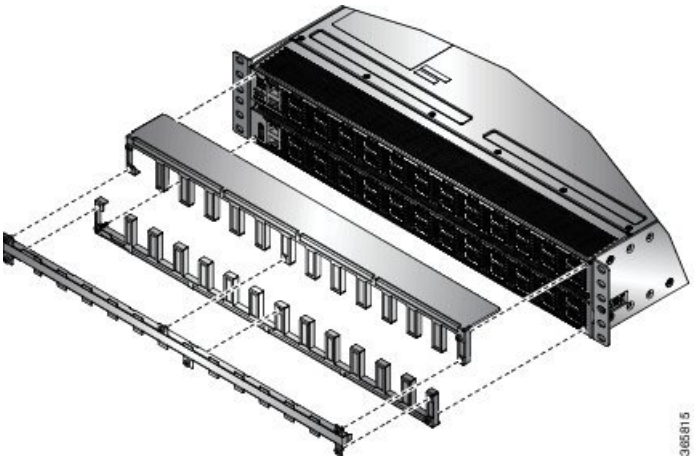

Step 2 Place the bottom air filter section along the bottom port-side of the chassis and secure it with the two screws at the lower left and right.

Step 3 Insert the air filter between the top and bottom air filter sections and tighten the six screws (two on each side, and two in the middle).

Install the Air Filter on the Port Side Exhaust

If the air filter on the port-side exhaust needs replacement, follow this procedure.

Step 1 Install the two standoffs to the chassis.

Figure 20: Port Side Exhaust Air Filter

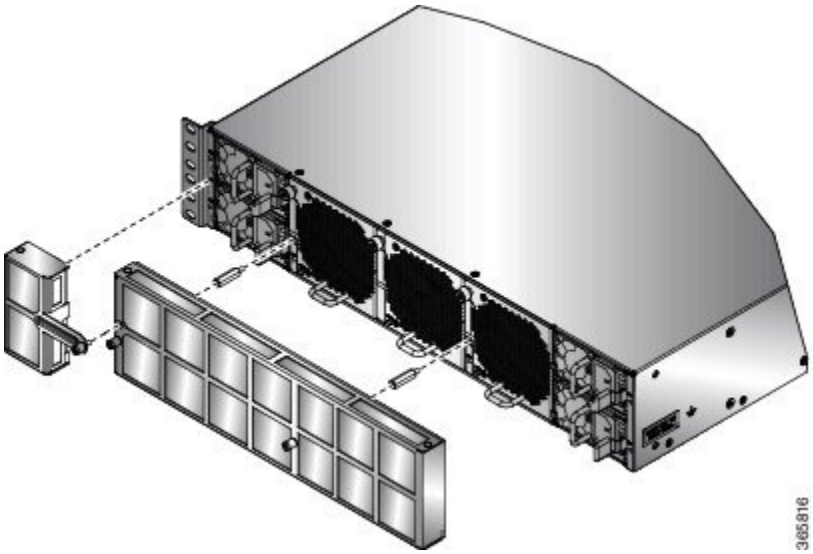

Step 2 Install the main air filter by aligning it to the standoffs and tightening the two thumb screws.

Step 3 Install the side filter extension and tighten the 2 screws (1 to the chassis and 1 to the main air filter).

Installing the Air Filter to the Chassis on a 4-Post Rack

This section describes about installing the air filter to the Cisco NCS-55A2-MOD-HD-S, Cisco NCS-55A2-MOD-HX-S and Cisco NC55A2-MOD-SE-H-S chassis on a 4-post rack.

Note Sliders can be extended from the rack by atleast 2 inches.

Before you begin

Complete the "Rack Mount the Chassis in a 4-Post Rack — Procedure 2, on page 10" procedure.

Step 1 Install the tray of the air filter box to the inner slider member

a. Align the tray of the air filter box to the inner slider member, as shown in the following figure.

Figure 21: Install the Tray of the Air Filter Box

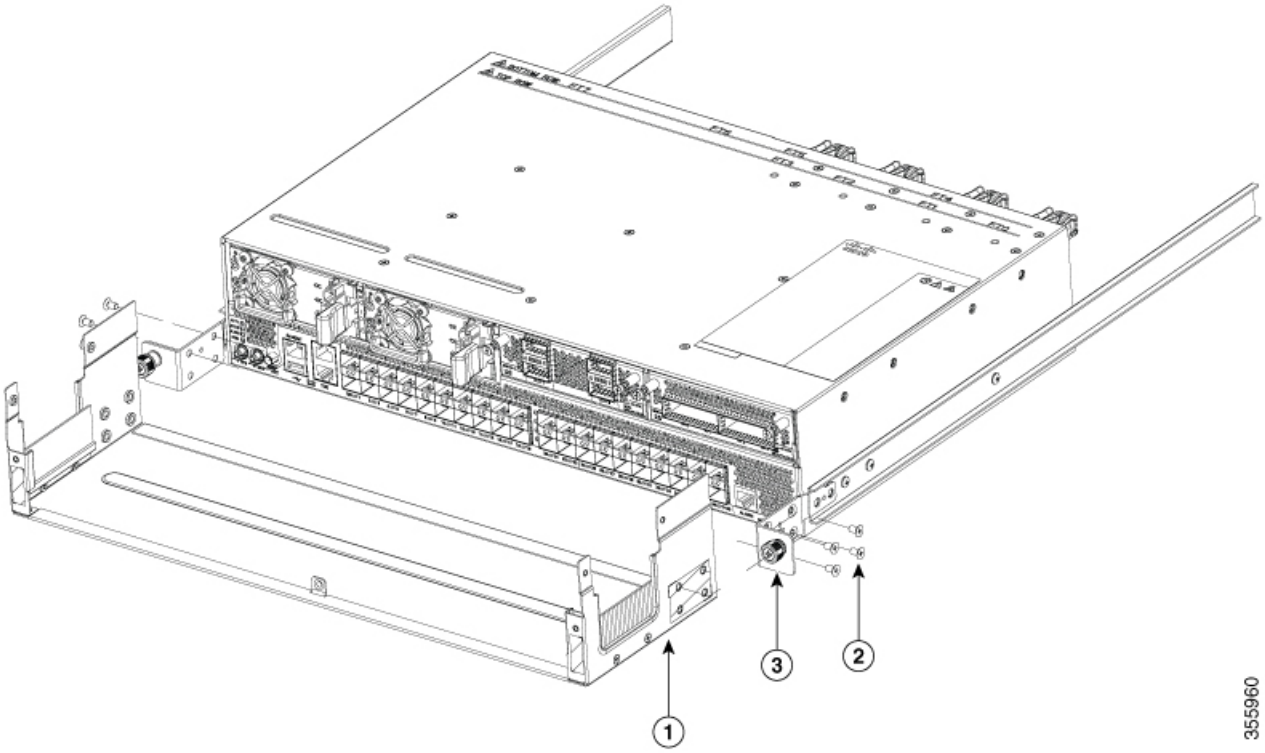

1	Air Filter Box - Tray	2	M4 x 8 Phillips couter sink screws
3	Inner slider member		

b. Tighten four M4 x 8 screws to 12 in-lbs (1.4 N-m) to secure the tray of the air filter box to the inner slider member.

c. Repeat 1a through 1b on the other inner slider member.

Step 2 Configure the system, modules, cables, and so on.

Step 3 Place and align the top cover of the air filter box, with the tray. Use the thumbscrews on either sides of the top cover to tighten. See the following figure:

Figure 22: Install the Top Cover of the Air Filter Box

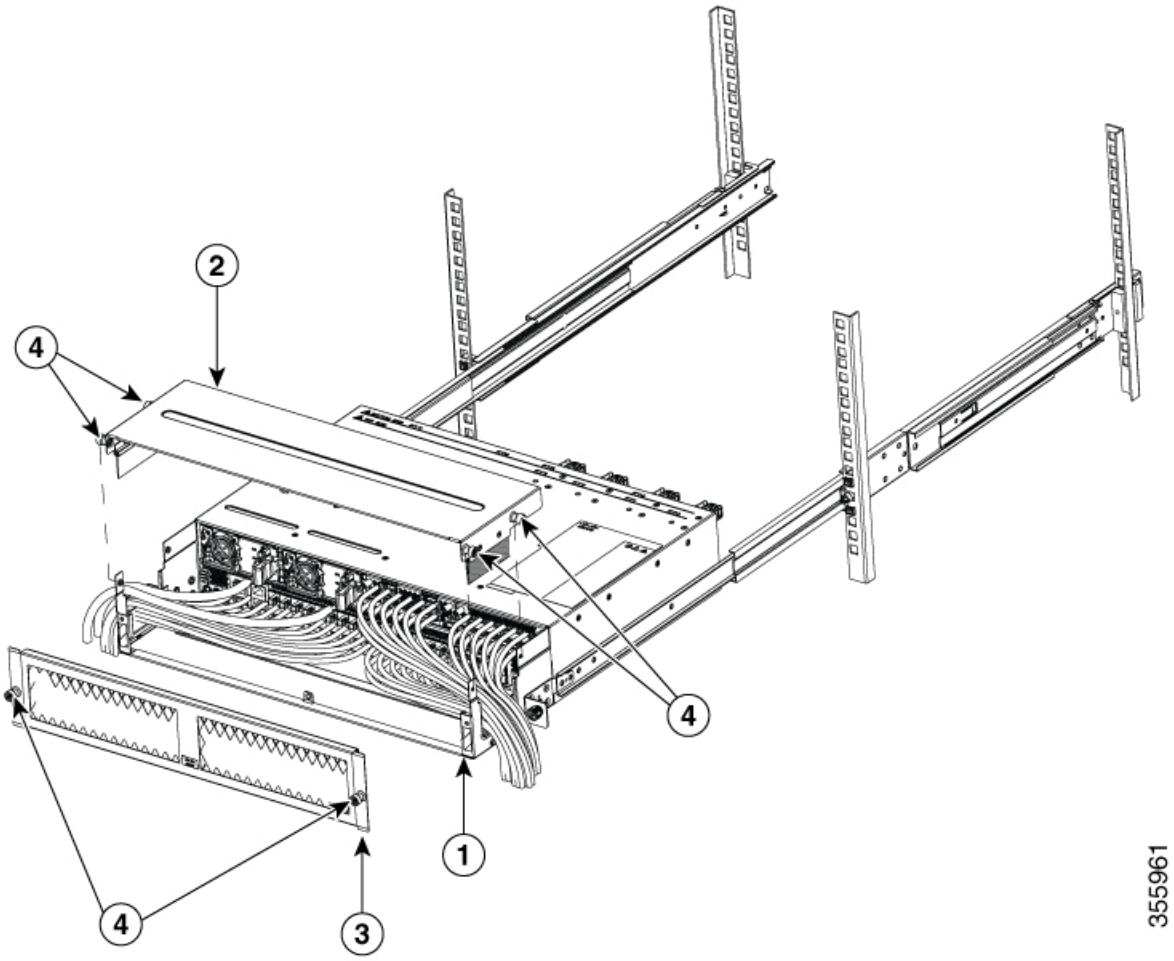

1	Air Filter Box - Tray	2	Top Cover
3	Front Filter	4	Thumbscrews

Step 4 Align the front filter faceplate with the air filter assembly. To ensure correct orientation, verify if the Cisco logo is present at the bottom center of the front filter faceplate. Tighten the thumbscrews on either sides of the front filter.

Step 5 Tighten the chassis with thumbscrews to the rack.

Installing the Air Filter to the Chassis on a 2-Post Rack (Port Side Inlet)

This procedure installs the air filter to the Cisco NCS-55A2-MOD-HD-S, Cisco NCS-55A2-MOD-HX-S and Cisco NC55A2-MOD-SE-H-S chassis on a 2-post rack (port side inlet)

Step 1 Place the chassis on a flat surface and mount the brackets (19-inch, 23-inch, or ETSI) on either sides of the chassis. Use four counter sink M4 screws with 12 in-lbs (1.4 N-m), to secure the brackets to the chassis.

Step 2 Place the air filter box in front of the chassis and attach the left and right hand side adapter bracket to secure the air filter box to the chassis. Use four counter sink M4 screws with 12 in-lbs (1.4 N-m), on each side to secure the air filter box to the chassis.

Figure 23: Installing the Air Filter to the Chassis on a 2-Post Rack

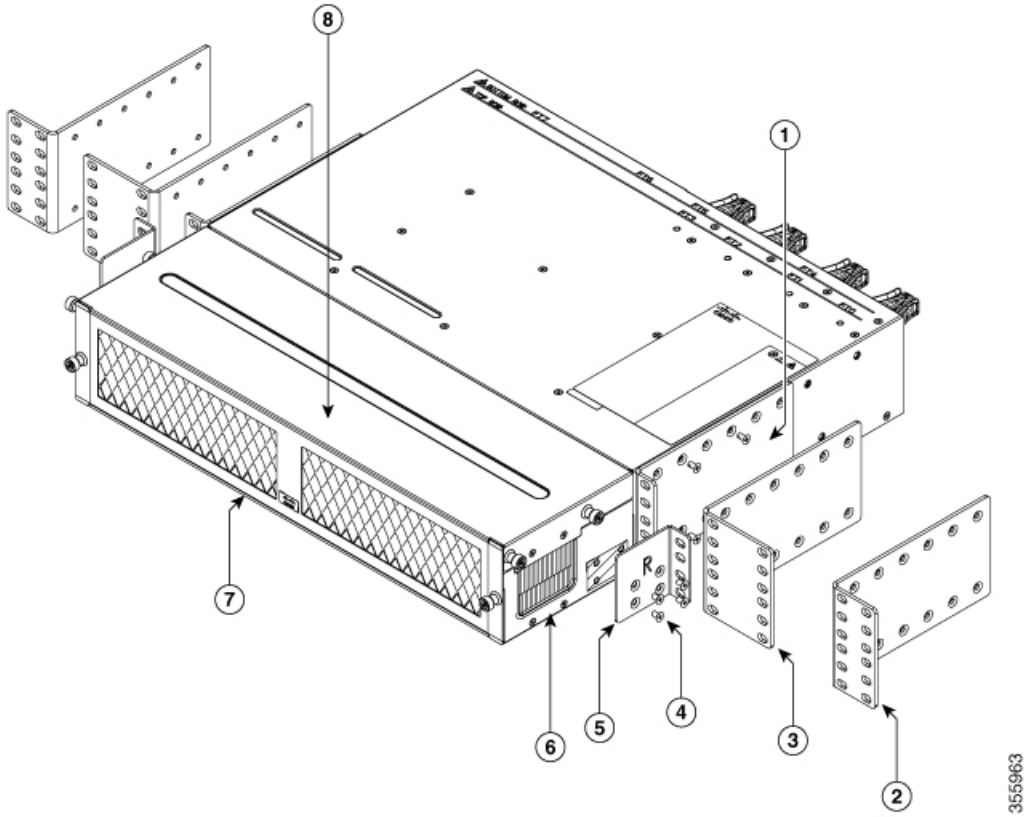

1	Rack-mount brackets- 19 inch	2	Rack-mount brackets- ETSI
3	Rack-mount brackets- 23 inch	4	M4 Phillips counter sink screws
5	Adapter bracket	6	Air Filter Box- Tray
7	Front filter	8	Top cover

Step 3 Lift the unit assembly (chassis along with the air filter box) and mount it to the appropriate rack size.

Note The top cover of the air filter box and the front filter faceplate can be removed for cable management.

Ground the Chassis

Warning **Statement 1024—**Ground Conductor

This equipment must be grounded. To reduce the risk of electric shock, never defeat the ground conductor or operate the equipment in the absence of a suitably installed ground conductor. Contact the appropriate electrical inspection authority or an electrician if you are uncertain that suitable grounding is available.

Warning **Statement 1046—**Installing or Replacing the Unit

To reduce risk of electric shock, when installing or replacing the unit, the ground connection must always be made first and disconnected last.

If your unit has modules, secure them with the provided screws.

Caution Grounding the chassis is required, even if the rack is already grounded. A grounding pad with two threaded holes is provided on the chassis for attaching either a grounding lug or grounding cover plate. The ground lug must be NRTL-listed. In addition, a copper conductor (wires) must be used and the copper conductor must comply with NEC code for ampacity.

Caution When terminating the frame ground, do not use soldering lug connectors, screwless (push-in) connectors, quick connect connectors, or other friction-fit connectors.

Step 1 Use a wire-stripping tool to remove approximately 0.75 inches (19 mm) of the covering from the end of the #6 AWG grounding cable.

Step 2 Insert the stripped end of the grounding cable into the open end of the grounding lug.

Step 3 Use the crimping tool to secure the grounding cable in the grounding lug.

Step 4 Attach the ground cable:

- **Cisco NCS-55A1-24H, Cisco NCS 5501, Cisco NCS 5501-SE, Cisco NCS-55A1-48Q6H, Cisco NCS-55A1-24Q6H-S, Cisco NCS-55A1-24Q6H-SS, Cisco NCS-55A2-MOD-S, Cisco NCS 55A2-MOD-SE-S , Cisco NCS-55A2-MOD-HX-S, Cisco NC55A2-MOD-SE-H-S , Cisco NCS-55A2-MOD-HD-S**: Remove the adhesive label from the grounding pad on the chassis. Place the grounding lug against the grounding pad so that there is solid metal-to-metal contact, and insert the two M4 or M5 screws with washers through the holes in the grounding lug and into the grounding pad.

Figure 24: Cisco NCS-55A1-24H, Cisco NCS 5501, Cisco NCS 5501-SE, Cisco NCS-55A1-48Q6H, Cisco NCS-55A1-24Q6H-S and Cisco NCS 55A2-MOD-SE-SGround Lug

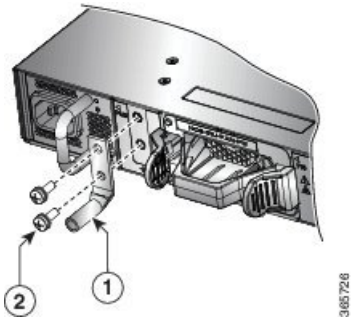

1	Grounding lug	2	M5 x 12mm pan-head screws

Figure 25: Cisco NCS-55A2-MOD-S , Cisco NCS 55A2-MOD-SE-S, Cisco NCS-55A2-MOD-HX-S, Cisco NC55A2-MOD-SE-H-S and Cisco NCS-55A2-MOD-HD-S Ground Lug

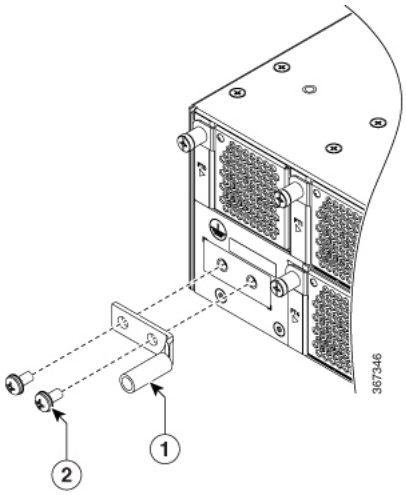

1	Grounding lug	2	M4 x 8mm pan-head screws

- **Cisco NCS 55A1-36H-S, Cisco NCS 55A1-36H-SE-S, NCS 5502 and NCS 5502-SE**: Attach one end of the shelf ground cable (#6 AWG cable) to the grounding cover plate using the specified dual-hole lug connector.

Figure 26: NCS 55A1-36H-S, Cisco NCS 55A1-36H-SE-S Ground Lug

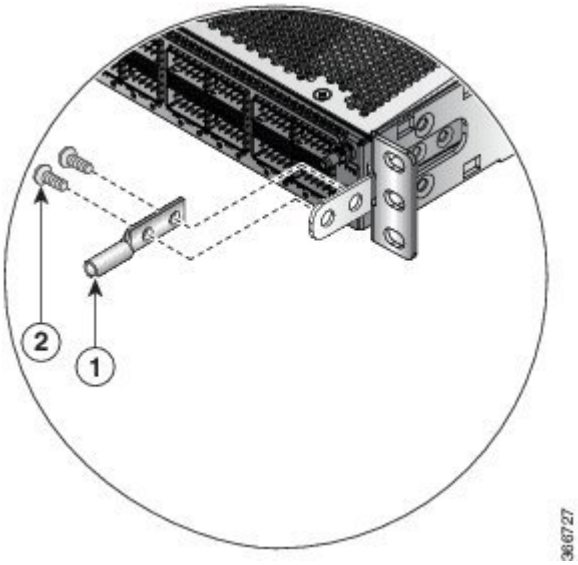

1	Grounding lug	2	M4 x 6mm pan-head screws

Figure 27: NCS 5502 Ground Lug

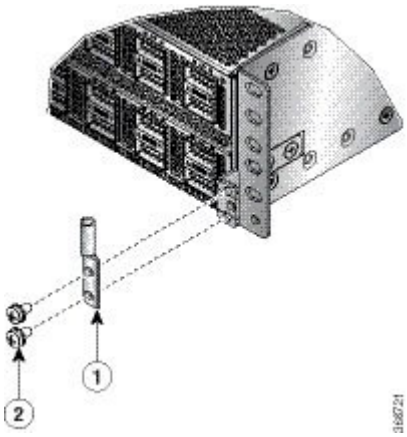

1	Grounding lug	2	M4 x 8mm pan-head screws

Step 5 Tighten the pan-head screws to torque value of 11.5 in-lbs (1.3 N-m).

Step 6 Ensure that the lug and cable do not interfere with other equipment.

Step 7 Prepare the other end of the grounding cable and connect it to an appropriate grounding point in your site to ensure adequate earth ground.

Connect AC Power to the Chassis

Caution The chassis relies on the protective devices in the building installation to protect against short circuit, overcurrent, and ground faults. Ensure that the protective devices comply with local and national electrical codes.

Note **Cisco NCS-55A1-24H, Cisco NCS 5501, Cisco NCS 5501-SE, Cisco NCS-55A1-48Q6H, Cisco NCS-55A1-24Q6H-S, Cisco NCS-55A1-24Q6H-SS**—To provide full output power of 1100 W, the nominal voltage rating value ranges between 100 V to 240 V, depending on the standards in various countries.

Cisco NCS 55A2-MOD-S, Cisco NCS 55A2-MOD-SE-S, Cisco NCS-55A2-MOD-HX-S, Cisco NC55A2-MOD-SE-H-S—To provide full output power of 1200 W, the nominal voltage rating value ranges between 100 V to 240 V, depending on the standards in various countries.

Cisco NCS 55A1-36H-S, Cisco NCS 55A1-36H-SE-S, Cisco NCS 5502, Cisco NCS 5502-SE—To provide full output power of 2000 W, the nominal voltage rating value ranges between 200V to 240V, depending on the standards in various countries.

Note A dual pole breaker is needed for the installation. The rating of the dual pole breaker for 110 V is 20 A and for 220 V is 16 A. The minimum cable size is 14 AWG for 110 V and 16 AWG for 220 V.

Step 1 Verify that the AC cable is installed in the correct AC source panel.

Step 2 Attach the AC power cable to the cable connector in the AC power module.

Step 3 Place the cable through the opening in the cable clamp.

Step 4 Slide the cable clamp toward the plug.

Step 5 Close the cable clamp on the shoulder of the power cable to secure the power cable.

Figure 28: Cable Clamp: Example

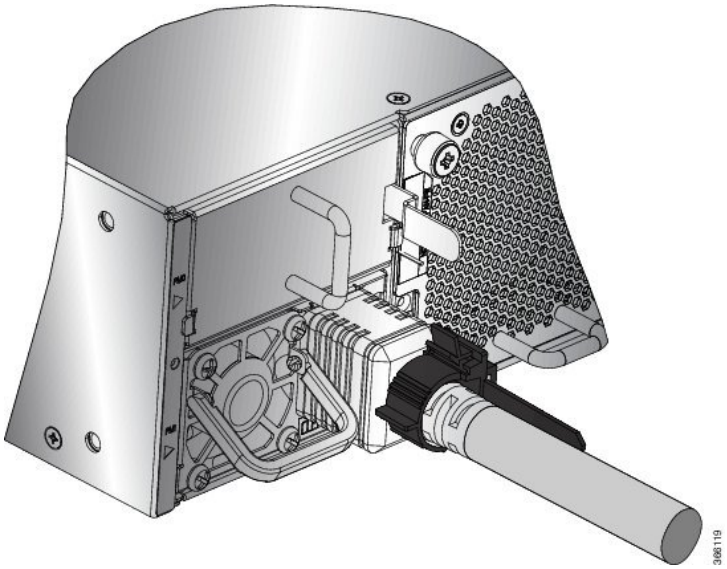

Connect DC Power to the Chassis

Warning **Statement 1003—**DC Power Disconnection

To reduce risk of electric shock or personal injury, disconnect DC power before removing or replacing components or performing upgrades.

Warning **Statement 1022—**Disconnect Device

To reduce the risk of electric shock and fire, a readily accessible disconnect device must be incorporated in the fixed wiring.

Warning **Statement 1046—**Installing or Replacing the Unit

To reduce risk of electric shock, when installing or replacing the unit, the ground connection must always be made first and disconnected last.

If your unit has modules, secure them with the provided screws.

Warning **Statement 1074—**Comply with Local and National Electrical Codes

To reduce risk of electric shock or fire, installation of the equipment must comply with local and national electrical codes.

Before installing a DC power supply to the switch, you will need to attach DC connection wires that you provide to the DC power connector. For 240-380 VDC power supply, the dual-pole breaker or fuse rating is 20 A. For 40-72 VDC power supply, the single breaker or fuse is 40 A.

Connect DC Power to the Chassis - NCS-950W-DCFW-A

Before you begin

Each DC input power cable is terminated at the power distribution unit (PDU) by a cable lug, as shown in the following figure.

Figure 29: DC Input Power Cable Lug

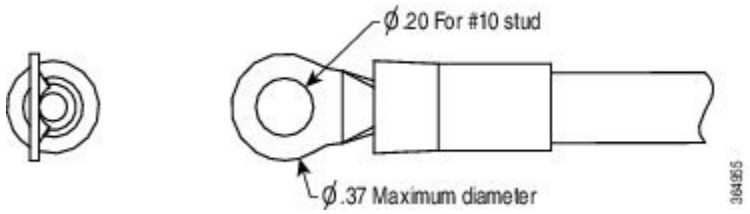

Note To avoid hazardous conditions, all components in the area where DC input power is accessible must be properly insulated. Therefore, before installing the DC cable lugs, be sure to insulate the lugs according to the manufacturer's instructions.

DC power connector is included in the DC power supply's accessory kit.

Step 1 Turn off the circuit breaker from the power source.

Step 2 Remove the plastic cover from the terminal block.

Figure 30: Connecting DC Power – NCS-950W-DCFW-A

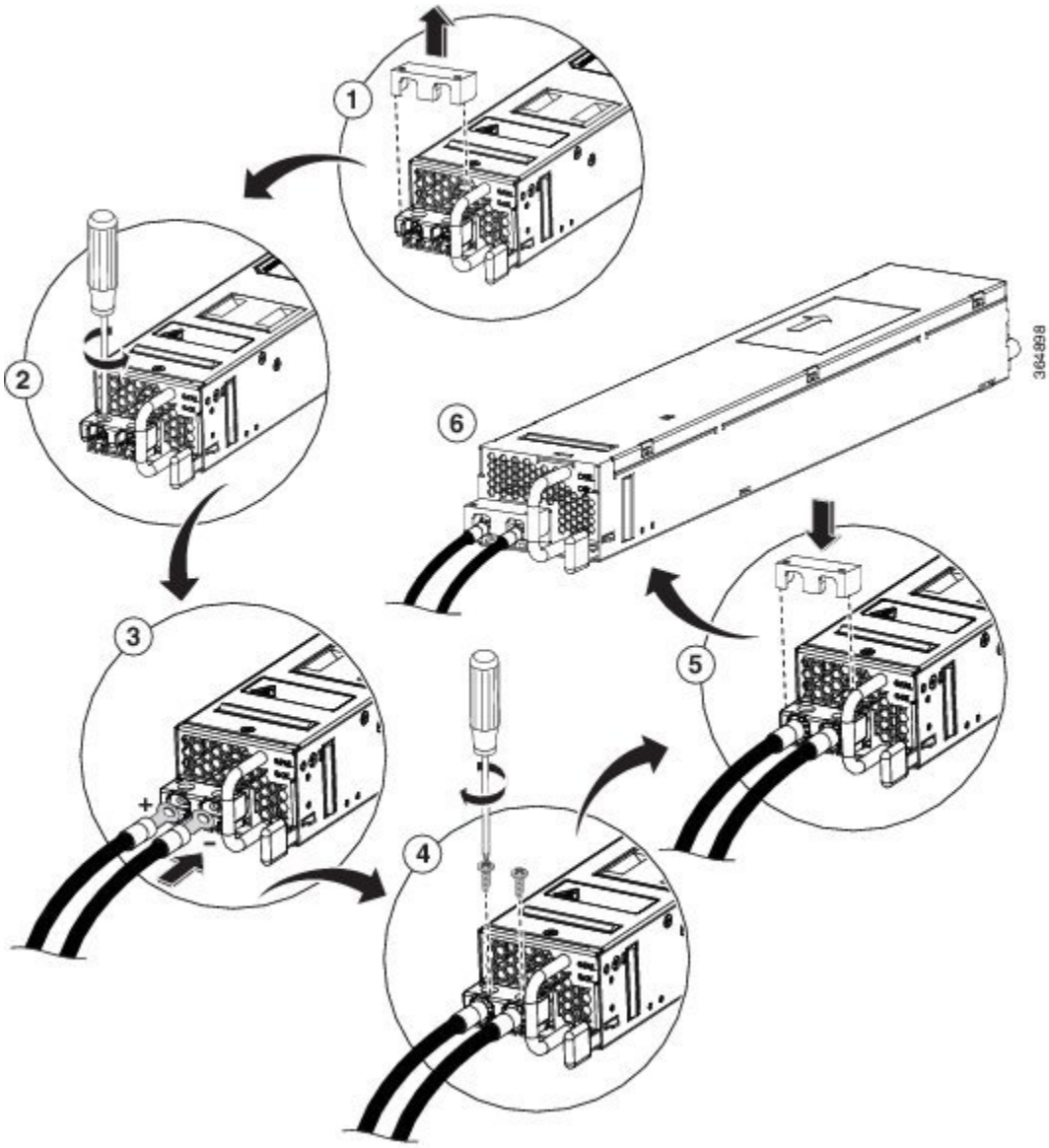

Step 3 Remove the set screws from the connector.

Step 4 Insert the black (DC negative) wire into the right aperture on the connector and insert the red (DC positive) wire into the left aperture on the connector.

Step 5 Reinstall the connection set screws and tighten them to a torque value of 0.65 Nm.

Note Do not tighten over 0.7 Nm.

Step 6 Replace the terminal block plastic cover. The plastic cover is slotted and keyed to fit correctly over the terminal block.

Step 7 Turn on the circuit breaker at the power source.

Connect DC Power to the Chassis – NCS-950W-DCFW

Caution The chassis relies on the protective devices in the building installation to protect against short circuit, overcurrent, and ground faults. Ensure that the protective devices comply with local and national electrical codes.

Note DC power connector is included in the DC power supply's accessory kit.

Step 1 Verify that the correct fuse panel is installed in the top mounting space.

Step 2 Measure and cut the cables as needed to reach the chassis from the fuse panel.

Note Use 10 to 12 AWG wire.

Step 3 Dress the power according to local practice.

Step 4 Connect the office battery and return cables according to the fuse panel engineering specifications.

Step 5 Remove the DC power connector block from the power supply by doing the following:

a) Use a small flat-blade screw driver to loosen the panel mounting screws on the sides of the connector.
b) Pull the connector block out of the power supply.

Step 6 Do one of the following:

- Strip 0.4 inches (10 mm) of insulation off the DC wires.
- Install wire ferrules ($4mm^2$ to $6mm^2$) on the power cables following manufacturer instructions.

Note Using wire ferrules creates a more secure connection between the wire and connector.

Step 7 Insert the black (DC negative) wire into the right aperture on the connector and insert the red (DC positive) wire into the left aperture on the connector.

Step 8 Use a small flat-blade screw driver to secure the spring-loaded wire retainers on the top of the DC input connectors using the following torque values:

- Bare wire $\leq 4\ mm^2$: 0.5 Nm to 0.6 Nm
- Bare wire $> 4\ mm^2$: 0.7 Nm to 0.8 Nm
- Wire ferrules: 0.7 Nm

Step 9 Insert the DC connector into the DC receptacle on the power supply.

Figure 31: Connecting DC Power – NCS-950W-DCFW

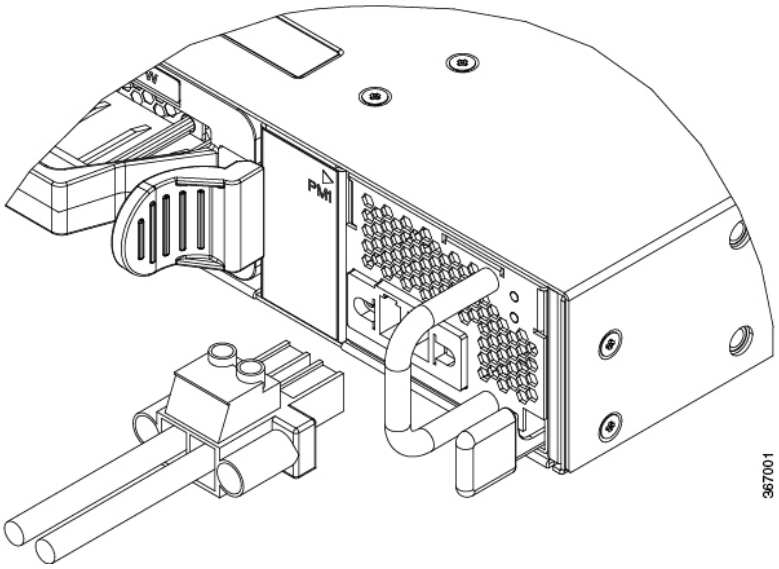

Step 10 Use a small flat-blade screw driver to tighten the panel mounting screws to a torque value of 0.5 to 0.8 Nm.

Step 11 Turn on the circuit breaker at the power source.

Connect DC Power to the Chassis – NC55-930W-DCFW, NC55-900W-DCFW-HD, NC55-2KW-DC

Caution The chassis relies on the protective devices in the building installation to protect against short circuit, overcurrent, and ground faults. Ensure that the protective devices comply with local and national electrical codes.

Step 1 Verify that the correct fuse panel is installed in the top mounting space.

Step 2 Measure and cut the cables as needed to reach the chassis from the fuse panel.

Note Use 10 to 12 AWG wire.

Step 3 Dress the power according to local practice.

Step 4 Connect the office battery and return cables according to the fuse panel engineering specifications.

Step 5 Insert the DC connector into the DC receptacle on the power supply:

Note For NC55-930W-DCFW and NC55-900W-DCFW-HD power supply units, please order the CAB-48DC-40A-8AWG power cord. For the NC55-2KW-DC power supply unit, please order the PWR-2KW-DC-CBL power cord.

- ***Figure 32: Connecting DC Power – NC55-930W-DCFW and NC55-900W-DCFW-HD***

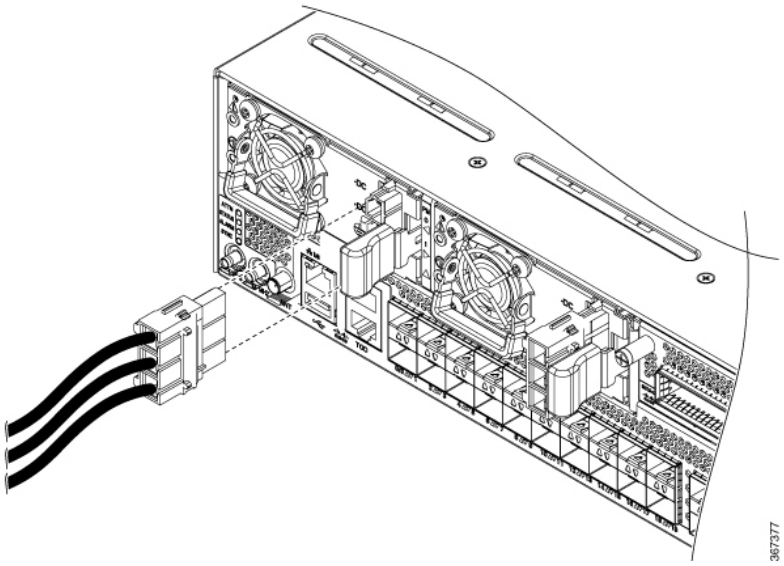

Ensure that the locking mechanism has engaged to secure the cable.

- ***Figure 33: Connecting DC Power – NC55-2KW-DC***

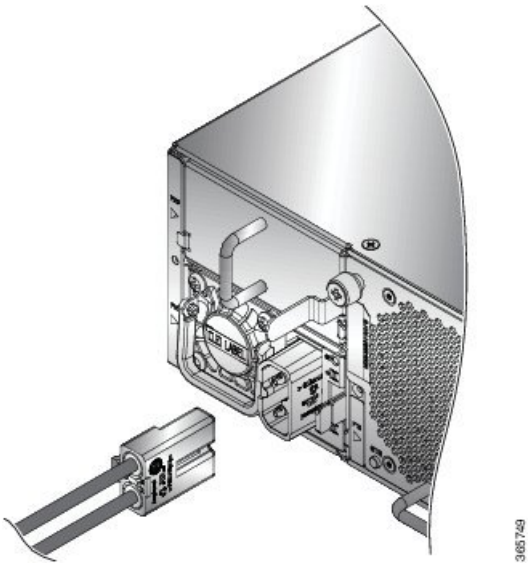

Ensure that the locking mechanism has engaged to secure the cable.